(en)

LOUVRE GRILLES

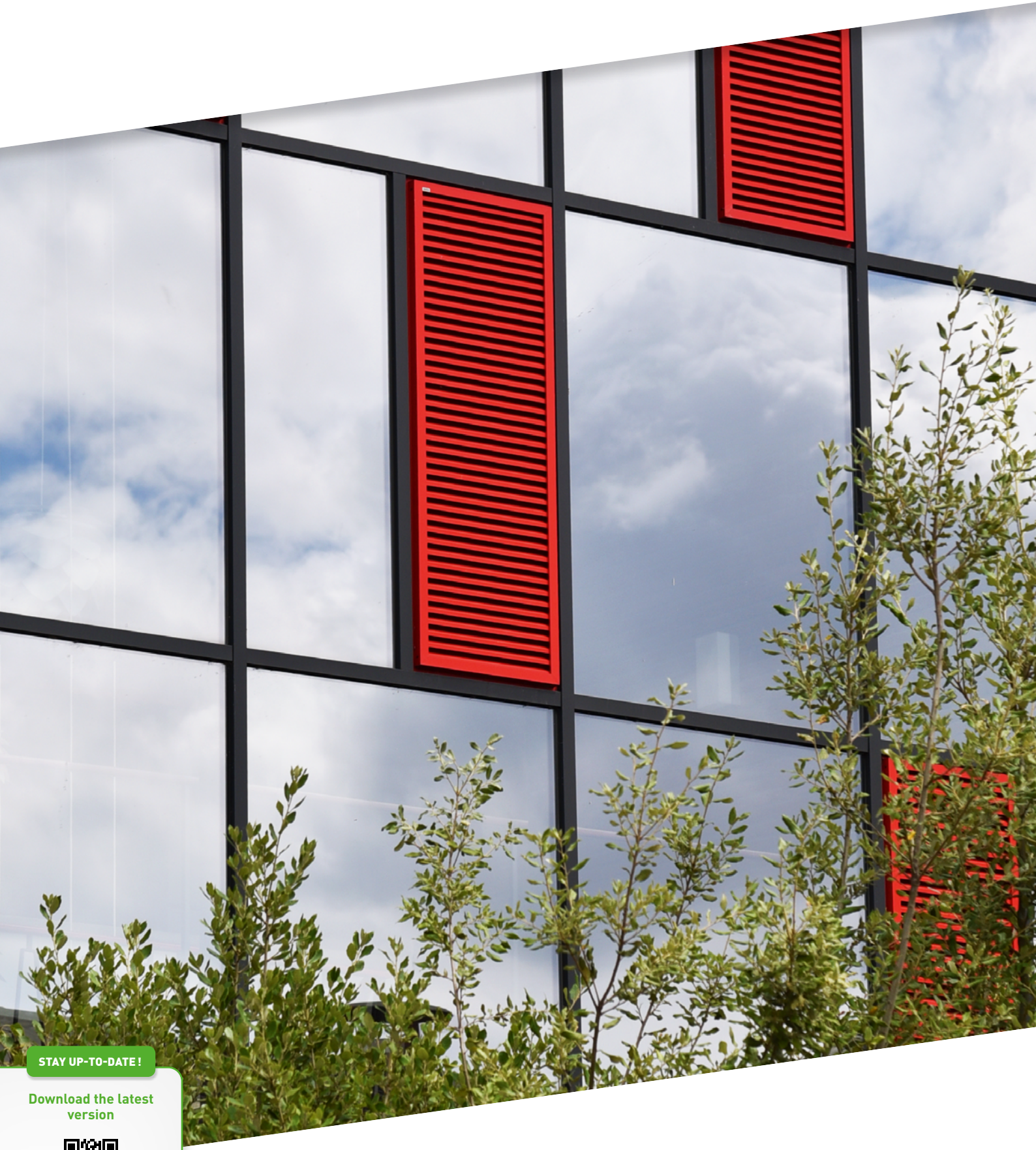

STAY UP-TO-DATE !

Download the latest version

link.duco.eu/brochure

DUCO

HOME OF OXYGEN

DUCO Ventilation & Sun Control provides every building with a healthy supply of oxygen. With a comprehensive range of innovative natural and mechanical ventilation systems, either combined with external solar shading or otherwise, DUCO offers the ultimate guarantee of a healthy and comfortable indoor climate. The occupant's health is, therefore, central to DUCO. A well-thought-out combination of basic ventilation, mechanical extraction, purge ventilation and solar shading ensures optimum air quality. DUCO provides an innovative solution for residential buildings, offices, schools or care centres where everyone feels at home.

DUCO, Home of Oxygen

DUCO

GENERAL 4

PRODUCTS 6

DucoGrille **Solid** 30Z 8
DucoGrille **Solid** MR 30Z 9
DucoGrille **Solid++** 30Z 10
DucoGrille **Solid ISO** 30Z 11
DucoGrille **Solid** G 30Z Barrier Load 12

DUCO BARRIER LOAD LOUVRE
Duco **Barrier Load Louvre** 13

DUCOGRILLE CLASSIC
DucoGrille **Classic** 20Z 14
DucoGrille **Classic** 20V 15
DucoGrille **Classic** 50Z 16
DucoGrille **Classic** 50/75Z 17
DucoGrille **Classic** 45HP 18
DucoGrille **Classic** 50HP 19
DucoGrille **Classic** 60HP 20
DucoGrille **Classic** 60HP Vertical 21
DucoGrille **Classic** 130HP 22
DucoGrille **Classic** 130HP Basic 23
DucoGrille **Classic** 70V 24
DucoGrille **Classic** 70V Vertical 25

DUCOGRILLE ACOUSTIC
DucoGrille **Acoustic** 75Z & 75L 28
DucoGrille **Acoustic** 150 29
Duco **Acoustic** Panel 30

DUCOGRILLE TRANSFER
DucoGrille **Transfer** 32
DucoGrille **Transfer Acoustic** 33

DUCOGRILLE CLOSE
DucoGrille **Close** 105 34
DucoGrille **Close** 35Z 36
DucoGrille **Close** M 100 37

DUCOGRILLE NIGHTVENT
DucoGrille **NightVent** 38

ROOF TURRETS
Duco **Roof Turret** Solid 30Z 42

VENTILATIVE COOLING 44

IMPACT AND FALL-THROUGH PROTECTION 46

REFERENCE PROJECTS 48

VARIOUS 50

Service 50
Dimensions and ordering information 51
Technical specification table 52

DISCLAIMER
Illustrations in this catalogue may differ from actual product. Printing errors and/or changes excepted. DUCO reserves the right to amend this information at any time. The information stated is valid as at 29.10.2025 and may be subject to changes in legislation.

A SOLUTION FOR **EVERY SITUATION**

→ Finish

Each type of grille is available in any colour: **F1*, every RAL colour, textured paint, special paints/lacquers, etc.** Every type of grille is lacquered as standard in **SeaSide** grade.In addition, every type of grille in this brochure complies with the **Qualicoat** or **Qualanod** quality specifications.

* Except DucoGrille Transfer Acoustic

→ Any building situation

DUCO has a wide range of natural air intake grilles for **both new buildings and refurbishment projects**. Depending on the type of grille, Duco offers the following options:

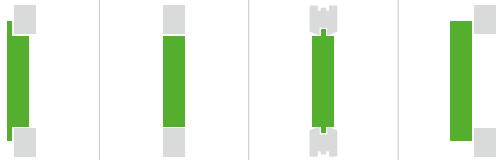

G
Recessed wall louvre with flange

N
Recessed wall louvre without flange

F
Window louvre

M
Surface mounted wall louvre

→ Penetration security

DucoGrille Classic louvre grilles with **V-blades** are penetration-proof.

→ Vandalism and intrusion security

Solid louvre blades are very sturdy and '**vandal-proof**'. The DucoGrille Solid++ is **burglar resistant up to class 2**, in accordance with the European standard.

→ Sound absorption

DucoGrille Acoustic louvre blades are fitted on the inside with non-combustible mineral wool and are ideally suited for applications with high levels of noise intrusion.

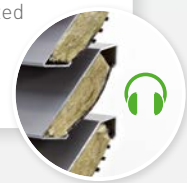

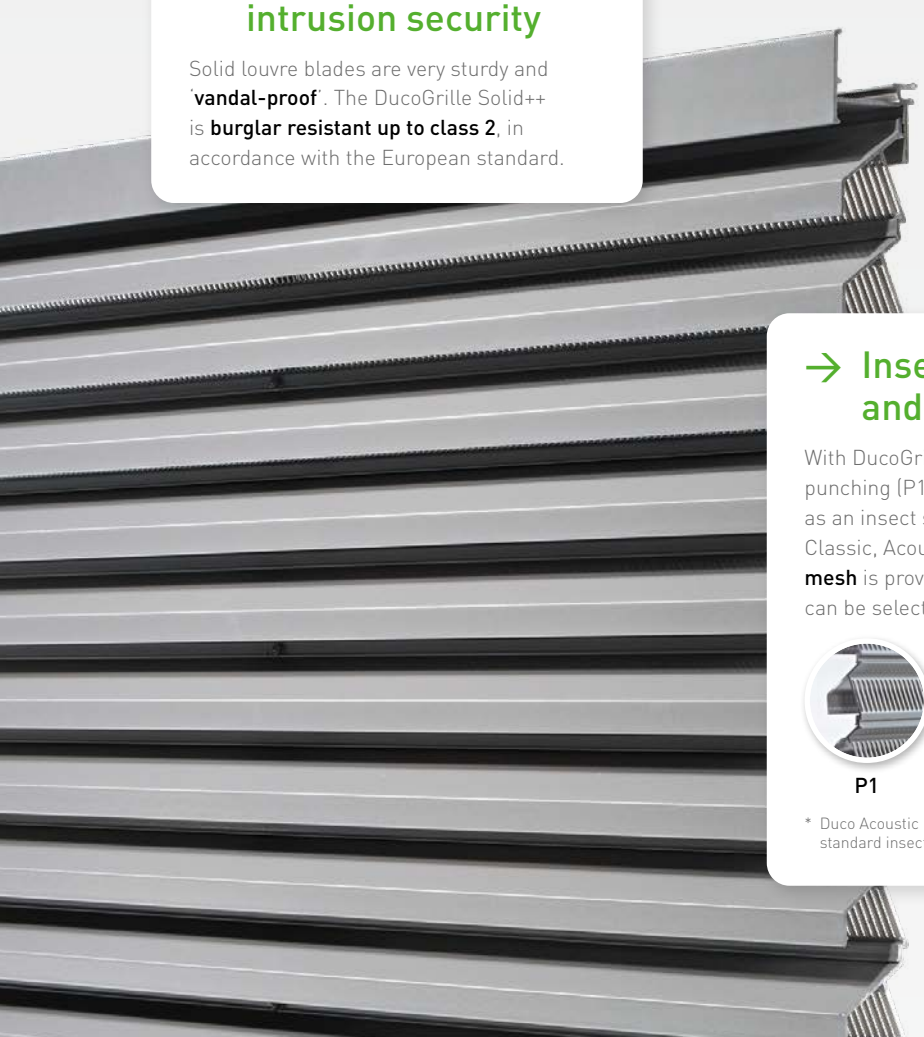

→ Insect screen and vermin screen

With DucoGrille Solid louvre grilles with small punching (P1), the **perforated louvre blades** act as an insect screen. With all other types* (Solid P2, Classic, Acoustic and Close 35Z), **2.3 x 2.3 mm stainless-steel mesh** is provided as standard. 6 x 6 mm or 20 x 20 mm mesh can be selected as an option.

P1

P2

Stainless-steel mesh

* Duco Acoustic Panel, DucoGrille Close 105 and DucoGrille Transfer do not have standard insect screening.

DucoGrille Solid G 30Z P1

→ Ventilation capacity

Each louvre is extensively tested and optimised by DUCO's R&D department. Many **'High Performance'** HP louvre blades in the DucoGrille Classic range ensure excellent airflow thanks to low resistance.

Air flow performance class	Ce or Cd
1	≥ 0,4
2	0,3 - 0,399
3	0,2 - 0,299
4	≤ 0,199

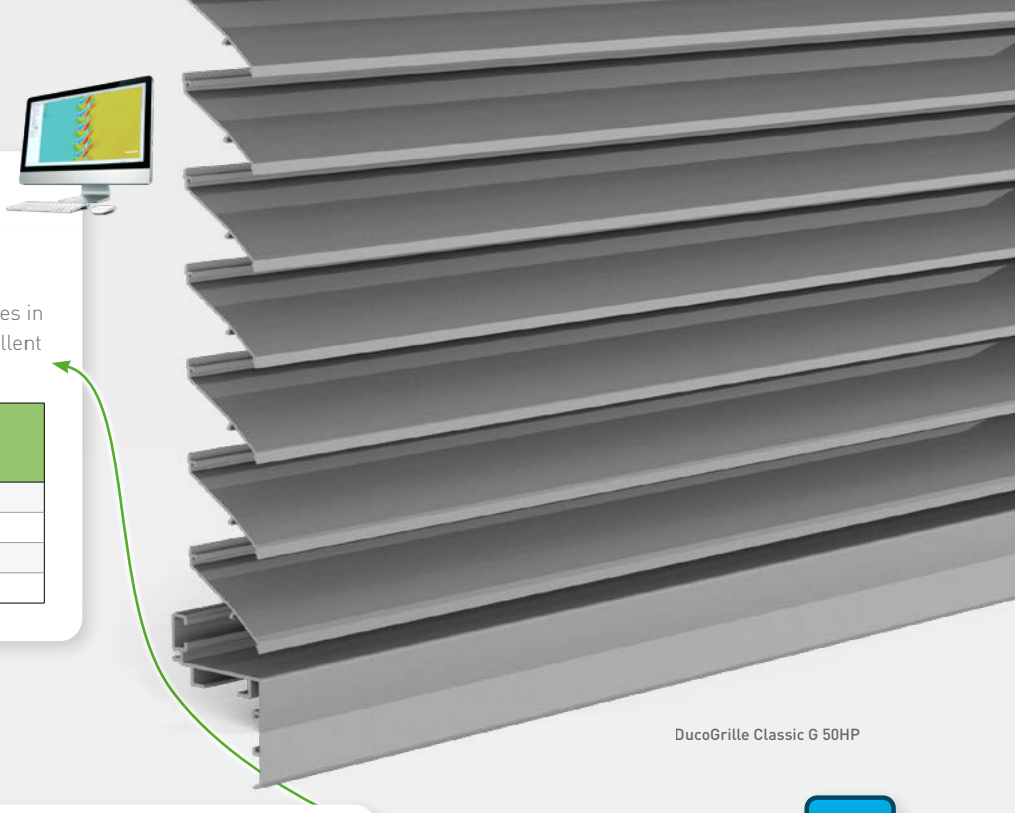

DucoGrille Classic G 50HP

→ Water resistance

EN13030

All DucoGrille louvre grilles have been tested by **BSRIA** in accordance with watertightness tests developed in collaboration with HEVAC. The test simulates 75 litres per hour rainfall at a wind speed of 13 metres per second. Based on the air speed in the louvre and the % of watertightness, the louvre is assigned a class.

Class A	100 - 99 %
Class B	98,5 - 95 %
Class C	94,9 - 80 %
Class D	< 80%

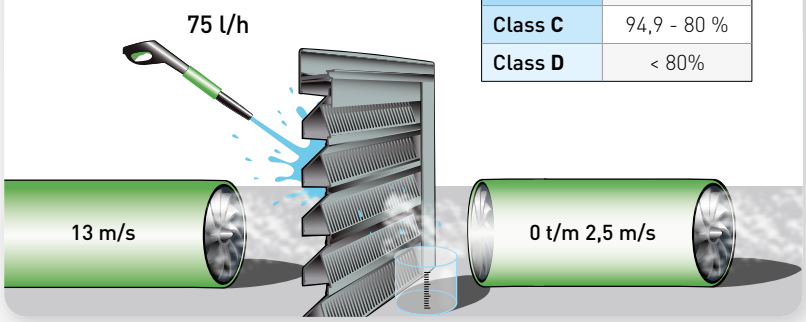

→ High Performance

HP

HP louvre grilles offer **high performance in terms of air passage or water resistance**, or in many cases a combination of both properties.

→ Custom building

The height and width of each grille* can be determined to the mm.

* With the exception of DucoGrille Acoustic 150, DucoGrille Close 35Z and DucoGrille Transfer.

→ STND and +OPT version

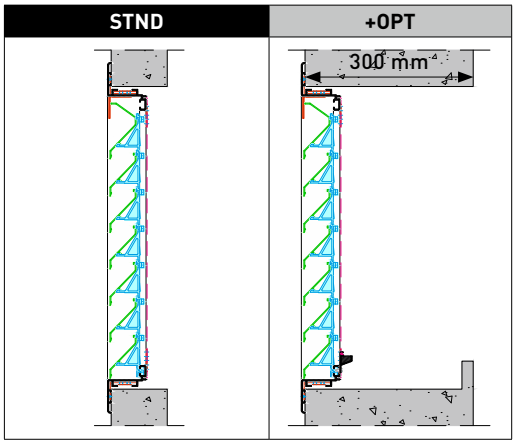

The technical values of our grilles have been tested in two ways:

STND = 'Standard'
This is the standard version.

+OPT = '+Options'
This is an optional version where the grille was tested in an installation situation of 300 mm and with (integrated) water gutter*.
The **+OPT** version will often bring better results in terms of water resistance. See each product page for all values per grille type.

* Depending on the type of grille

PRODUCT OVERVIEW

	Ventilation capacity = at intake = at exhaust The longer the bar, the more important the air flow. STND and +OPT version: see page 5	G Recessed wall louvre **with** flange	N Recessed wall louvre **without** flange	F Window louvre	M Surface mounted wall louvre	
DUCOGRILLE SOLID						
Sturdy, **vandal-proof / burglary resistant** louvre grilles with multiple, sleek dovetailing Z-blades.						
DucoGrille **Solid 30Z**	STND / +OPT	✓	✗	✓	✓	see p. 8
DucoGrille **Solid++ 30Z** RC2	STND / +OPT	✓	✗	✗	✓	see p. 10
DucoGrille **Solid ISO 30Z** RC2	STND / +OPT n/a	✗	✗	✓	✗	see p. 11
DucoGrille **Solid 30Z Barrier Load**	STND / +OPT	✓	✗	✗	✗	see p. 12
* DucoGrille Solid++ G 30Z complies with impact and fall-through protection, DucoGrille Solid++ M 30Z only complies with fall-through protection.						
BARRIER LOAD LOUVRE						
Fall through protection grilles for open windows at great heights.						
Duco **Barrier Load Louvre**	STND n/a / +OPT n/a	✗	✗	✗	✗	see p. 13
DUCOGRILLE CLASSIC						
Recessed wall or window louvres, where the aluminium louvre blades are clicked into place on **blade holders**.						
DucoGrille **Classic 20Z**	STND / +OPT	✓	✗	✓	✗	see p. 14
DucoGrille **Classic 20V**	STND / +OPT	✓	✗	✓	✗	see p. 15
DucoGrille **Classic 50Z**	STND / +OPT	✓	✓	✓	✗	see p. 16
DucoGrille **Classic 50/75Z**	STND / +OPT	✓	✓	✓	✗	see p. 17
DucoGrille **Classic 45HP** HP	STND / +OPT	✓	✓	✓	✗	see p. 18
DucoGrille **Classic 50HP** HP	STND / +OPT	✓	✓	✓	✗	see p. 19
DucoGrille **Classic 60HP** HP	STND / +OPT	✓	✓	✓	✗	see p. 20
DucoGrille **Classic 60HP Vertical** HP	STND / +OPT n/a	✓	✓	✓	✗	see p. 21
DucoGrille **Classic 130HP** HP	STND / +OPT n/a	✓	✓	✗	✗	see p. 22
DucoGrille **Classic 130HP Basic** HP	STND / +OPT n/a	✓	✓	✗	✗	see p. 23
DucoGrille **Classic 70V**	STND / +OPT	✓	✗	✗	✗	see p. 24
DucoGrille **Classic 70V Vertical**	STND / +OPT	✓	✗	✗	✗	see p. 25

Legend

Vandal-proof
The grille is vandal-proof

Impact protection
Resistant to intense shocks

Penetration safe
The grille is penetration-proof

Fall-through protection
Prevents people from falling through

	Ventilation capacity = at intake = at exhaust The longer the bar, the more important the air flow. STND and +OPT version: see page 5	G Recessed wall louvre **with** flange	N Recessed wall louvre **without** flange	F Window louvre	M Surface mounted wall louvre	
DUCOGRILLE ACOUSTIC						
Recessed wall louvres featuring **sound-absorbing**, non-combustible mineral wool.						
DucoGrille **Acoustic 75Z**	STND / +OPT	✓	✗	✗	✗	see p. 28
DucoGrille **Acoustic 75L**	STND / +OPT	✓	✗	✗	✗	see p. 28
DucoGrille **Acoustic 150**	STND / +OPT n/a	✓	✓	✗	✗	see p. 29
Duco **Acoustic** Panel **150**	STND / +OPT	✓	✓	✗	✗	see p. 30
Duco **Acoustic** Panel **250**	STND / +OPT	✓	✓	✗	✗	see p. 30
Duco **Acoustic** Panel **300**	STND / +OPT	✓	✓	✗	✗	see p. 31
Duco **Acoustic** Panel **300HP**	STND / +OPT	✓	✓	✗	✗	see p. 31
Duco **Acoustic** Panel **500HP**	STND / +OPT	✓	✓	✗	✗	see p. 31
DUCOGRILLE TRANSFER						
Transfer grille for doors and walls.						
DucoGrille **Transfer**	STND / +OPT n/a	Installation in door or wall with/without counterframe				see p. 32
DucoGrille **Transfer Acoustic**	STND	Installation in door or wall with/without counterframe				see p. 33
DUCOGRILLE CLOSE						
Adjustable louvre grilles with manual or electric operation.						
DucoGrille **Close 105**	Ventilation capacity depending on internal and external louvre grille	✗	✗	✗	✗	see p. 34
DucoGrille **Close 35Z**	STND / +OPT n/a	✓	✓	✓	✗	see p. 36
DucoGrille **Close M 100**	STND / +OPT n/a	✗	✗	✗	✓	see p. 37
DUCOGRILLE NIGHTVENT						
Glass-replacing ventilation hatch with manual or electronic operation.						
DucoGrille **NightVent** RC2	STND / +OPT n/a	✗	✗	✓	✗	see p. 38
ROOF TURRETS						
Kits and components to build roof turrets with DucoWall louvre blades.						
Duco **Roof Turret Solid 30Z**	STND / +OPT n/a	✗	✗	✗	✗	see p. 42

Legend

RC2 — **Burglar resistant**
The grille is (optionally) burglar resistant up to class 2

Water resistant
The louvre grille is water resistant to a **high** or **very high** degree

Sound absorption
Can be used in projects with **light** or **heavy (+)** noise exposure

HP — **High Performance**
The louvres are optimised for high performance

Fall-through protection

Vandal-proof

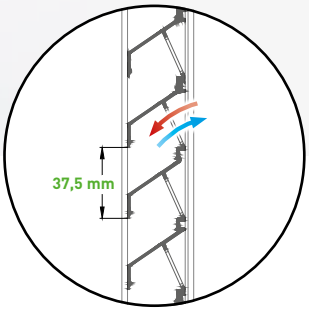

DucoGrille
Solid 30Z

DucoGrille Solid 30Z louvre blades offer high ventilation capacity with relatively small louvre blades. The 'stackable' louvre blades form a single screen, making them **extra strong** and **vandal-proof**.

The louvre blades are available with **small punching (P1)**, **large punching (P2)** or as **false louvres (NP)** and provide a uniform façade design when combined in a single project.

DucoGrille Solid 30Z grilles comply with the BS 6180 standard (class X or XI) for **fall-through protection** (except MR30Z and Solid ISO). See page 46-47 for more information.

FRAME TYPES AND DIMENSIONS

Dimensions in mm	G	G Large	F 30Z/24	F 30Z/28 30Z/32	M
Louvre pitch	37,5				
Installation depth	34,4	31,9	-	-	-
Frame rebate	18,2	40	-	-	-
Frame depth	-	-	38	42	43
Flange width	-	-	24	28/32	-
Min. dimensions	min. W 200 x H 200				

VENTILATION VALUES

Property		P1		P2	
		STND	+OPT	STND	+OPT
Visual free area		60 %	60 %	86 %	86 %
Physical free area		34 %	34 %	48 %	48 %
Ce (higher is better)		0,243	0,216	0,258	0,232
Cd (higher is better)		0,234	0,242	0,253	0,266
K-FACTOR (lower is better)	INTAKE	16,94	21,43	15,02	18,58
	EXHAUST	18,26	17,08	15,62	14,13

STND and +OPT version: see page 5

WATER RESISTANCE

Air velocity	Class			
	P1		P2	
	STND	+OPT	STND	+OPT
0 m/s	B	B	C	B
0,5 m/s	C	B	C	B
1 m/s	C	C	C	B
1,5 m/s	D	C	D	B
2 m/s	D	D	D	C
2,5 m/s	D	D	D	D

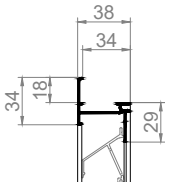

G 30Z
Recessed wall louvre with flange

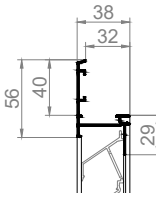

G 30Z Large
Recessed wall louvre with **extra large** flange

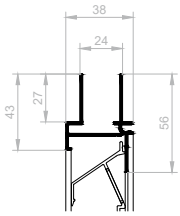

F 30Z/24
Window louvre

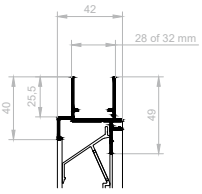

F 30Z/28
F 30Z/32
Window louvre

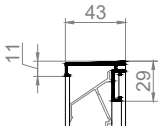

M 30Z
Surface mounted wall louvre

Punching

DucoGrille Solid 30Z is available with louvre blades with **small punching (P1)**, **large punching (P2)** or without punching as **false louvres (NP)**. Combining the two in the same project ensures a uniform appearance.

INSECT SCREEN

Punching		P1	P2	NP
Resistant to...		Perforated louvre blades as insect screen Stainless-steel mesh **2,3 x 2,3 mm** **OPTIONAL**	Stainless-steel mesh **2.3 x 2.3 mm** **STANDARD**	100 % false louvre
			Stainless-steel mesh **6 x 6 mm** **OPTIONAL**	
			Stainless-steel mesh **20 x 20 mm** **OPTIONAL**	

Round version: MR 30Z

The **DucoGrille Solid MR 30Z** is a round surface mounted wall louvre.

DIMENSIONS

	MR 30Z
Frame depth	35 mm
Min. / max. dimensions	min. dia. 300 mm max. Ø 1500 mm

Stainless-steel mesh is not available for round louvre grilles. All other dimensions and properties are the same as for the DucoGrille Solid M 30Z.

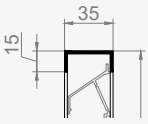

MR 30Z
Surface mounted wall louvre

MORE INFO
→ **Dimensions & order information:** see page 51
→ **Full specifications:** see page 52
→ **Impact & fall-through protection:** see page 46-47

Fall-through protection

Burglar resistant up to class 2

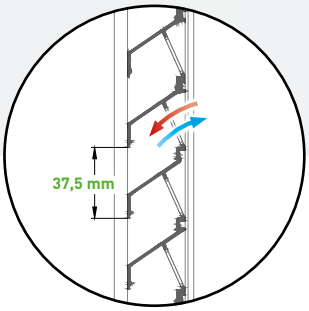

DucoGrille
Solid++ 30Z

The DucoGrille Solid++ 30Z uses the same louvre blades as the Solid 30Z (P1 only), but with a **reinforced frame section**. This makes the louvre grilles **burglar resistant up to Class 2**, in accordance with the European standard.

DucoGrille Solid++ G 30Z grilles comply with class 5 of EN 13049 for **impact protection**. DucoGrille Solid++ 30Z grilles meet the BS 6180 standard (class X or XI) for **fall-through protection**. See page 46-47 for all classes per country.

FRAME TYPES AND DIMENSIONS

Dimensions in mm	G	M
Louvre pitch	37,5	
Installation depth	38,4	-
Frame rebate	15	-
Frame depth	-	42
Min. dimensions	min. W 200 x H 200	

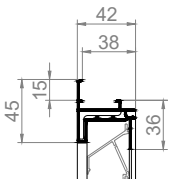

++ G 30Z
Recessed wall louvre with flange

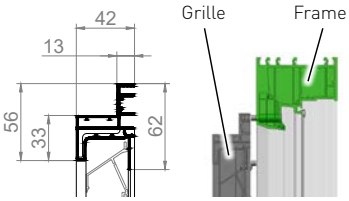

++ M 30Z
Surface mounted louvre grille for fitting on a frame

PROPERTIES

The DucoGrille Solid++ 30Z is only available with P1 louvre blades. All properties relating to ventilation capacity, water resistance and insect resistance are identical to the DucoGrille Solid 30Z P1 (see page 8).

P1

DucoGrille **Solid++ G 30Z** has passed all the tests prescribed in the 'Burglar resistance Construction products' prEN 1627 to prEN 1630 draft standards for class 2 intrusion resistance.

DucoGrille **Solid++ M 30Z** complies with standards NEN 5096:2007 and EN 1627:2011

The complete test report is obtainable upon request:
G 30Z: DE 651 XG 815 – CAR 8175 | **M 30Z**: SKG12.1036

MORE INFO
→ **Dimensions & order information:** see page 51
→ **Full specifications:** see page 52
→ **Impact & fall-through protection:** see page 46-47

Also available in **RC2 intrusion-resistant** version

thermally insulated

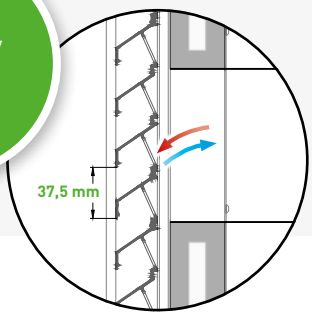

DucoGrille
Solid ISO 30Z

The DucoGrille Solid ISO 30Z is an architectural and **thermally insulated window louvre**. The window louvre can be connected to both round and rectangular air ducts. Available as an option with reinforced frame section for burglary-resistance up to class 2 (only with P1 blades).

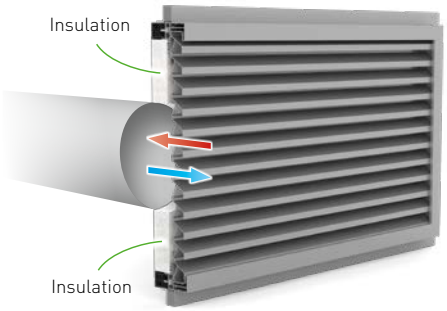

DIMENSIONS AND PROPERTIES

Frame depth	88 mm (with thermal break)
Flange width	24 / 28 / 32 / 36 / 40 / 44 / 48 mm
Duct connection	Round or rectangular, any dimension
Grille dimensions	Louvre grille height = duct height + 2 x 63 mm min. Grille width = duct width + 2 x 63 mm min. Min. W 300 x H 300 mm Max. 2900 mm high / wide if other dimension < 1250 mm
U-value	0.9 W/m²K

→ Rear for **round** duct

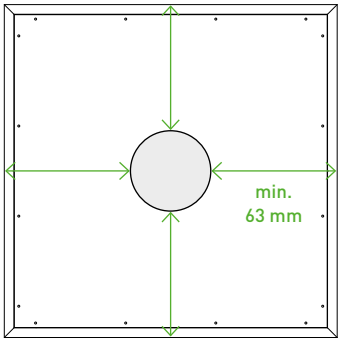

PROPERTIES

The DucoGrille Solid ISO 30Z is available with P1 and P2 louvre blades. All properties relating to ventilation capacity and water resistance are identical to the corresponding DucoGrille Solid 30Z models (see page 8).

P1

P2

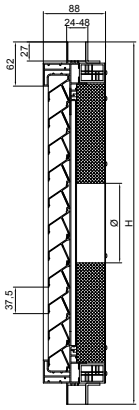

→ Rear for **rectangular** duct

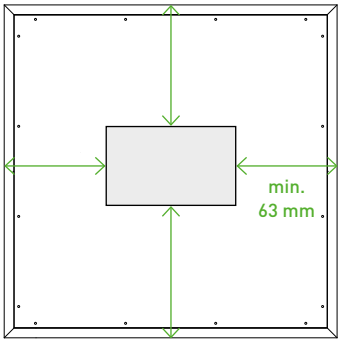

MORE INFO
→ **Dimensions & order information:** see page 51
→ **Full specifications:** see page 52

Fall-through protection

Impact protection

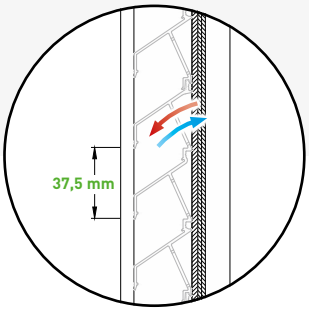

DucoGrille
Solid G 30Z Barrier Load

The DucoGrille Solid 30Z Barrier Load is ideally suited for high-rise applications such as student housing, retail and commercial buildings.
It meets the highest standards in **fall-through protection** and **impact protection** (see page 46-47 for more info).

Fall-through protection standards:
- B 03-004: Class C4
- NEN EN 1991-1-1: A/B/F/G
- NF P01-013: A/B (Width < 600 mm)
- BS 6180: XI

Impact protection standards:
- EN 13049: Class 5
- NF P08-302: H2/C2

Furthermore, the DucoGrille Solid 30Z Barrier Load offers the same benefits for purge ventilation as the DucoGrille Solid G 30Z (see page 8).

FRAME TYPES AND DIMENSIONS

Dimensions in mm	G
Louvre pitch	37,5
Installation depth	-
Frame rebate	15
Frame depth	42
Min. dimensions	min. W 200 x H 200

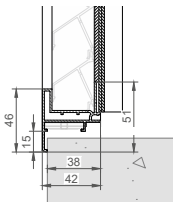

G 30Z
Barrier Load

MORE INFO
→ **Dimensions & order information:** see page 51
→ **Full specifications:** see page 52
→ **Impact & fall-through protection:** see page 46-47

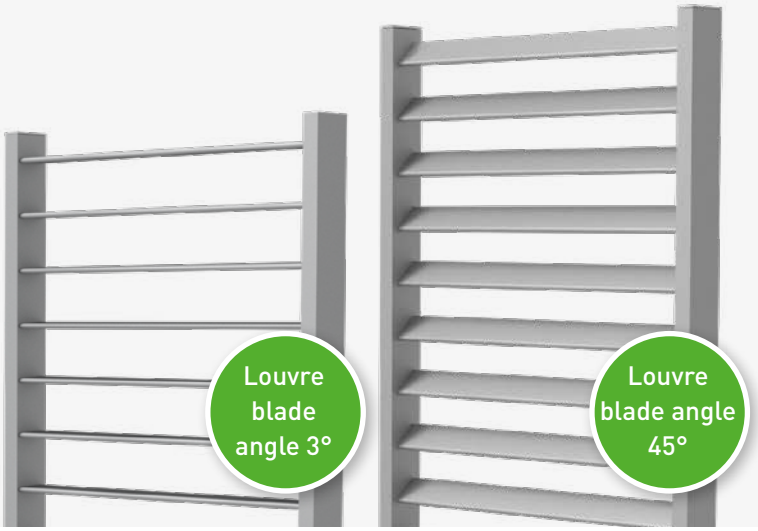

Fall-through protection

Impact protection

Duco **Barrier Load Louvre**

Barrier Load Louvres have several advantages, such as fall through protection for open windows at great heights and intensive ventilation of the rooms inside the building. At the same time, the louvre blades provide solar shading while blocking out the sun's rays and heat without loss of daylight. In addition to these functions, DUCO Barrier Load Louvres also provide an architectural aspect to the façade. This type of louvres is widely used in student housing, but can be adapted to any project.

It meets the highest standards in **fall-through protection** and **impact protection** (see page 46-47 for more info).

Fall-through protection standards:

- B 03-004: Class A/B/C4/D
- NEN EN 1991-1-1: Class A/B/C4/D
- BS 6180: XI

Impact protection standards:

- EN 13049: Class 5
- NF P08-302:
  - Louvre blade angle 3°: Class Q4
  - Louvre blade angle 45° and 55°: Class H2

FRAME TYPES AND DIMENSIONS

Dimensions in mm	SlimFrame 11/70	LuxFrame 35/70
Louvre pitch	min. 50, max. 100	min. 50, max. 100
Installation depth	70	70
Frame depth	11	35
Min. dimensions	min. W 100	min. W 100
Max. dimensions	max. W 1000	max. W 1000

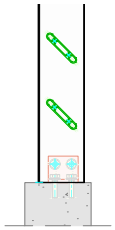

Mounted on the four corners

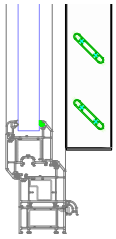

Mounted directly on the window frame

MORE INFO
→ **Dimensions & order information:** see page 51
→ **Full specifications:** see page 52
→ **Impact & fall-through protection:** see page 46-47

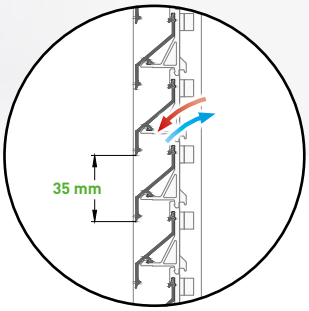

DucoGrille
Classic 20Z

DucoGrille Classic 20Z consists of two different types: a recessed wall louvre (G) and an architectural window louvre (F). All types are manufactured from extruded aluminium sections. Insect mesh is fitted as standard. The **"Z"-shaped louvre blade** produces a sleek design.

FRAME TYPES AND DIMENSIONS

Dimensions in mm	G	F
Louvre pitch	35	
Installation depth	30	-
Frame rebate	19	-
Flange width	-	24
Frame depth	-	35
Min. dimensions	min. W 200 x H 200	

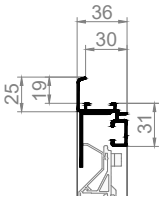

G 20Z
Recessed wall louvre with flange

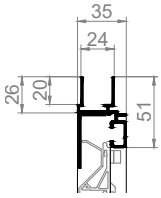

F 20Z
Window louvre

VENTILATION VALUES

Property		STND	+OPT
Visual free area		63 %	63 %
Physical free area		41 %	41 %
Ce (higher is better)		0,203	0,203
Cd (higher is better)		0,174	0,174
K-FACTOR (lower is better)	INTAKE	24,27	24,27
	EXHAUST	33,03	33,03

WATER RESISTANCE

Air velocity	Class	
	STND	+OPT
0 m/s	C	B
0,5 m/s	C	B
1 m/s	C	C
1,5 m/s	D	D
2 m/s	D	D
2,5 m/s	D	D

STND and +OPT version: see page 5

Insect protection: standard stainless steel mesh 2.3 x 2.3 mm, optional stainless steel mesh 6 x 6 mm or stainless steel mesh 20 x 20 mm

MORE INFO
→ **Dimensions & order information:** see page 51
→ **Full specifications:** see page 52

Good water resistance

Penetration safe

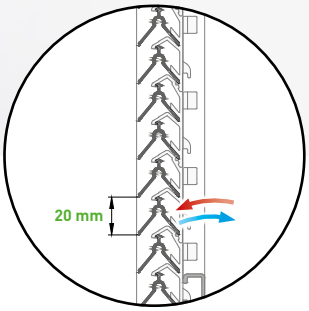

DucoGrille
Classic 20V

DucoGrille Classic 20V consists of two different types: a recessed wall louvre (G) and an architectural window louvre (F). All types are manufactured from extruded aluminium sections. Insect mesh is fitted as standard. The **"V"-shaped louvre blade** produces a sleek design.

FRAME TYPES AND DIMENSIONS

Dimensions in mm	G	F
Louvre pitch	20	
Installation depth	30	-
Frame rebate	19	-
Flange width	-	24
Frame depth	-	35
Min. dimensions	min. W 200 x H 200	

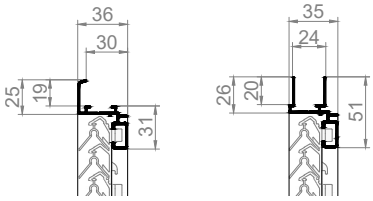

G 20V
Recessed wall louvre with flange

F 20V
Window louvre

VENTILATION VALUES

Property		STND	+OPT
Visual free area		95 %	95 %
Physical free area		34 %	34 %
Ce (higher is better)		0,155	0,149
Cd (higher is better)		0,155	0,149
K-FACTOR (lower is better)	INTAKE	41,62	45,04
	EXHAUST	41,62	45,04

WATER RESISTANCE

Air velocity	Class	
	STND	+OPT
0 m/s	A	A
0,5 m/s	B	A
1 m/s	C	B
1,5 m/s	D	B
2 m/s	D	C
2,5 m/s	D	D

STND and +OPT version: see page 5

Insect protection: standard stainless steel mesh 2.3 x 2.3 mm, optional stainless steel mesh 6 x 6 mm or stainless steel mesh 20 x 20 mm

MORE INFO
→ Dimensions & order information: see page 51
→ Full specifications: see page 52

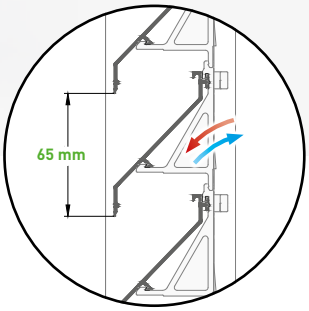

DucoGrille
Classic 50Z

DucoGrille Classic 50Z consists of three different types: a recessed wall louvre (G with flange, N without flange) and an architectural window louvre (F). All types are manufactured from extruded aluminium sections. Insect mesh is fitted as standard. The **"Z"-shaped louvre blade** produces a sleek design.

FRAME TYPES AND DIMENSIONS

Dimensions in mm		G	N	F
Louvre pitch		65		
Installation depth		62	65	-
Frame rebate		48	0	-
Flange width		-	-	28
Frame depth		-	-	77
Min. dimensions	WIDTH	300		
	HEIGHT	300		350

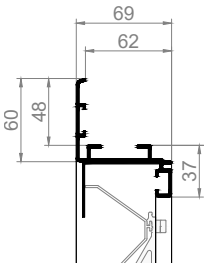

G 50Z
Recessed wall louvre **with** flange

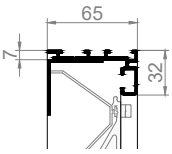

N 50Z
Recessed wall louvre **without** flange

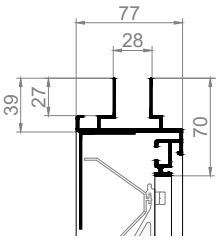

F 50Z
Window louvre

VENTILATION VALUES

Property		STND	+OPT
Visual free area		75 %	75 %
Physical free area		47 %	47 %
Ce (higher is better)		0,232	0,207
Cd (higher is better)		0,263	0,266
K-FACTOR (lower is better)	INTAKE	18,58	23,34
	EXHAUST	14,46	14,13

WATER RESISTANCE

Air velocity	Class	
	STND	+OPT
0 m/s	C	A
0,5 m/s	C	B
1 m/s	C	B
1,5 m/s	D	C
2 m/s	D	C
2,5 m/s	D	D

STND and +OPT version: see page 5

Insect protection: standard stainless steel mesh 2.3 x 2.3 mm, optional stainless steel mesh 6 x 6 mm or stainless steel mesh 20 x 20 mm

MORE INFO
→ **Dimensions & order information:** see page 51
→ **Full specifications:** see page 52

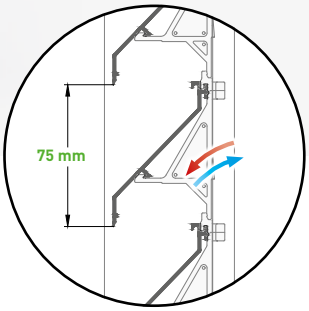

DucoGrille
Classic 50/75Z

DucoGrille Classic 50/75Z consists of three different types: a recessed wall louvre (G with flange, N without flange) and an architectural window louvre (F). All types are manufactured from extruded aluminium sections. Insect mesh is fitted as standard. The **"Z"-shaped louvre blade** produces a sleek design.

FRAME TYPES AND DIMENSIONS

Dimensions in mm		G	N	F
Louvre pitch		75		
Installation depth		62	65	-
Frame rebate		48	0	-
Flange width		-	-	28
Frame depth		-	-	77
Min. dimensions	WIDTH	300		
	HEIGHT	300		350

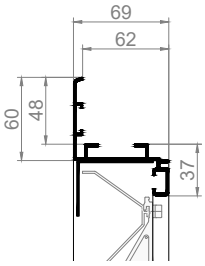

G 50/75Z
Recessed wall louvre **with** flange

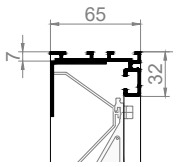

N 50/75Z
Recessed wall louvre **without** flange

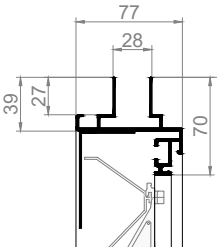

F 50/75Z
Window louvre

VENTILATION VALUES

Property		STND	+OPT
Visual free area		80 %	80 %
Physical free area		49 %	49 %
Ce (higher is better)		0,239	0,219
Cd (higher is better)		0,278	0,288
K-FACTOR (lower is better)	INTAKE	17,51	20,85
	EXHAUST	12,94	12,06

WATER RESISTANCE

Air velocity	Class	
	STND	+OPT
0 m/s	C	A
0,5 m/s	C	B
1 m/s	C	B
1,5 m/s	D	C
2 m/s	D	C
2,5 m/s	D	D

STND and +OPT version: see page 5

Insect protection: standard stainless steel mesh 2.3 x 2.3 mm, optional stainless steel mesh 6 x 6 mm or stainless steel mesh 20 x 20 mm

MORE INFO
→ **Dimensions & order information:** see page 51
→ **Full specifications:** see page 52

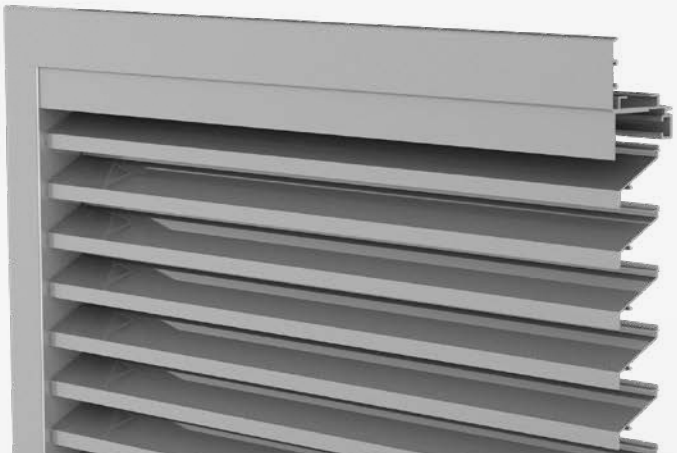

HP

High Performance

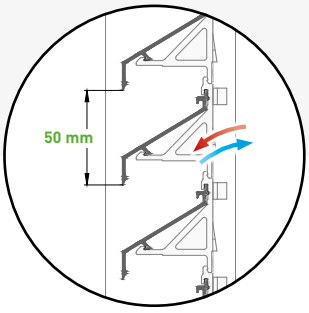

DucoGrille
Classic 45HP

The DucoGrille Classic 45HP combines **excellent air flow** with a **"Z"-shaped louvre blade** for a sleek design. As a result, the DucoGrille Classic 45HP can be used for purge ventilation in projects with specific aesthetic requirements. All types are manufactured from extruded aluminium sections. Insect mesh is fitted as standard.

FRAME TYPES AND DIMENSIONS

Dimensions in mm	G	N	F
Louvre pitch	50		
Installation depth	62	65	-
Frame rebate	48	0	-
Flange width	-	-	28
Frame depth	-	-	77
Min. dimensions	min. W 250 x H 250		
Louvre blade holders	Plastic Metal Clip Reaction to fire A2-s1,d0 (EN13501-1)		

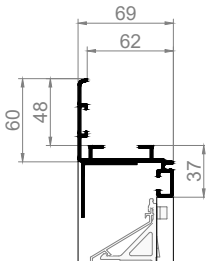

G 45HP
Recessed wall louvre **with** flange

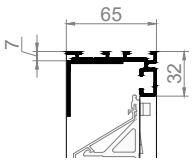

N 45HP
Recessed wall louvre **without** flange

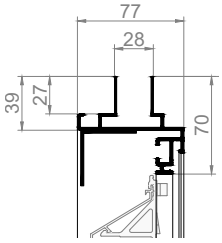

F 45HP
Window louvre

VENTILATION VALUES

Property		STND	+OPT
Visual free area		70 %	70 %
Physical free area		60 %	60 %
Ce (higher is better)		0,341	0,295
Cd (higher is better)		0,365	0,369
K-FACTOR (lower is better)	INTAKE	8,60	11,49
	EXHAUST	7,51	7,34

WATER RESISTANCE

Air velocity	Class	
	STND	+OPT
0 m/s	C	B
0,5 m/s	C	B
1 m/s	D	C
1,5 m/s	D	C
2 m/s	D	C
2,5 m/s	D	C

STND and +OPT version: see page 5

Insect protection: standard stainless steel mesh 2.3 x 2.3 mm, optional stainless steel mesh 6 x 6 mm or stainless steel mesh 20 x 20 mm

MORE INFO
→ **Dimensions & order information:** see page 51
→ **Full specifications:** see page 52

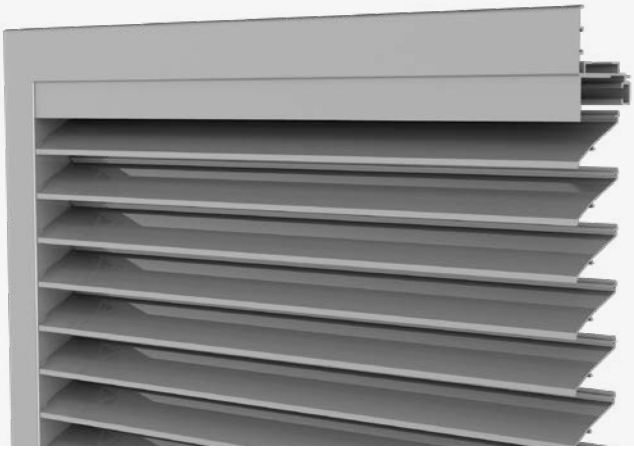

HP

High Performance

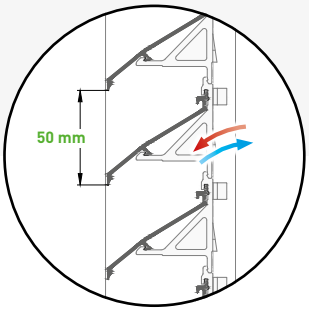

DucoGrille
Classic 50HP

The DucoGrille Classic 50HP has been specially developed **for purge ventilation**. The uniquely shaped 'High Performance' louvre blade with a low resistance factor ensures **excellent air flow**. All types are manufactured from extruded aluminium sections. Insect mesh is fitted as standard.

FRAME TYPES AND DIMENSIONS

Dimensions in mm	G	N	F
Louvre pitch	50		
Installation depth	62	65	-
Frame rebate	48	0	-
Flange width	-	-	28
Frame depth	-	-	77
Min. dimensions	min. W 250 x H 250		
Louvre blade holders	Plastic Metal Clip Reaction to fire A2-s1,d0 (EN13501-1)		

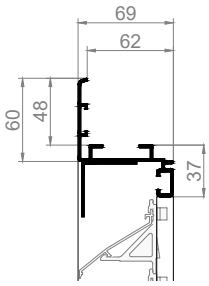

G 50HP
Recessed wall louvre with flange

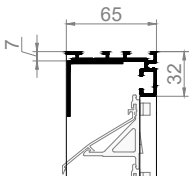

N 50HP
Recessed wall louvre without flange

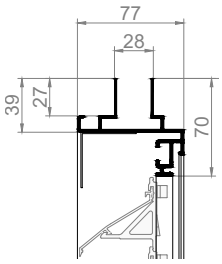

F 50HP
Window louvre

VENTILATION VALUES

Property		STND	+OPT
Visual free area		88 %	88 %
Physical free area		68 %	68 %
Ce (higher is better)		0,399	0,352
Cd (higher is better)		0,392	0,415
K-FACTOR (lower is better)	INTAKE	6,28	8,07
	EXHAUST	6,51	5,81

WATER RESISTANCE

Air velocity	Class	
	STND	+OPT
0 m/s	C	B
0,5 m/s	C	B
1 m/s	C	B
1,5 m/s	D	C
2 m/s	D	C
2,5 m/s	D	C

STND and +OPT version: see page 5

Insect protection: standard stainless steel mesh 2.3 x 2.3 mm, optional stainless steel mesh 6 x 6 mm or stainless steel mesh 20 x 20 mm

MORE INFO
→ **Dimensions & order information:** see page 51
→ **Full specifications:** see page 52

High Performance

Excellent water resistance

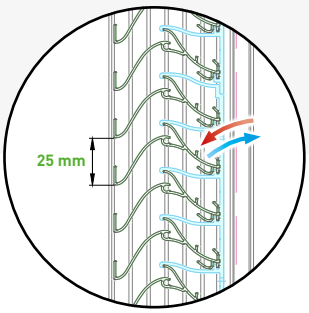

DucoGrille
Classic 60HP

The DucoGrille Classic 60HP was specially developed for **purge ventilation**. The uniquely shaped 'High Performance' louvre blade with a low resistance factor provides **excellent water resistance (class A)**. All types are manufactured from extruded aluminium sections. Insect mesh is fitted as standard.

FRAME TYPES AND DIMENSIONS

Dimensions in mm		G	N	F
Louvre pitch		25		
Installation depth		76,5		
Frame rebate		33	0	-
Flange width		-	-	28 - 32
Frame depth		76,5		
Min. dimensions	WIDTH	200		300
	HEIGHT	200		300

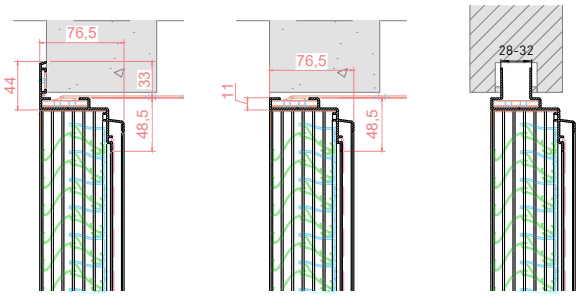

G 60HP
Recessed wall louvre **with** flange

N 60HP
Recessed wall louvre **without** flange

F 60HP
Window louvre

VENTILATION VALUES

Property		STND	+OPT
Visual free area		60 %	60 %
Physical free area		50 %	50 %
Ce (higher is better)		0,200	0,197
Cd (higher is better)		0,252	0,253
K-FACTOR (lower is better)	INTAKE	25,00	25,77
	EXHAUST	15,75	15,62

WATER RESISTANCE

Air velocity	Class	
	STND	+OPT
0 m/s	A	A
0,5 m/s	A	A
1 m/s	A	A
1,5 m/s	A	A
2 m/s	A	A
2,5 m/s	C	A

STND and +OPT version: see page 5

Insect protection: standard stainless steel mesh 2.3 x 2.3 mm, optional stainless steel mesh 6 x 6 mm or stainless steel mesh 20 x 20 mm

MORE INFO
→ **Dimensions & order information:** see page 51
→ **Full specifications:** see page 52

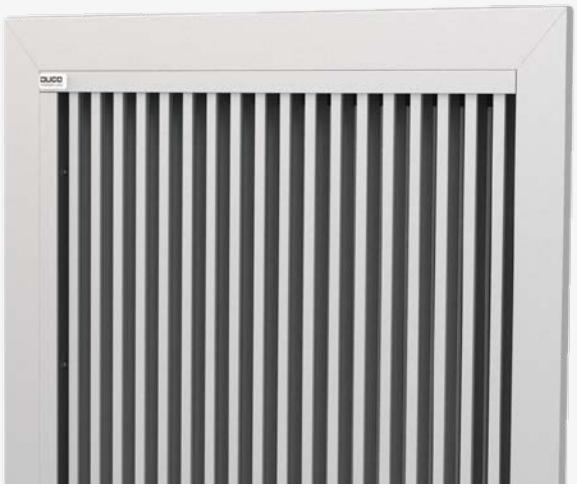

High Performance

Excellent water resistance

water resistance
CLASS A
up to 2.5 m/s

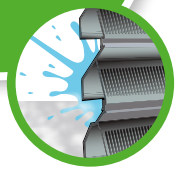

DucoGrille
Classic 60HP Vertical

The DucoGrille Classic 60HP Vertical was specially developed for **purge ventilation**. DucoGrille Classic 60HP Vertical is a variant of the DucoGrille Classic 60HP, but with **vertical louvres**. The uniquely shaped 'High Performance' louvre blade with a low resistance factor provides **excellent water resistance (class A)**. All types are manufactured from extruded aluminium sections. Insect mesh is fitted as standard.

FRAME TYPES AND DIMENSIONS

Dimensions in mm		G	N	F
Louvre pitch		25		
Installation depth		76,5		
Frame rebate		33	0	-
Flange width		-	-	28 - 32
Frame depth		76,5		
Min. dimensions	WIDTH	200		300
	HEIGHT	200		300

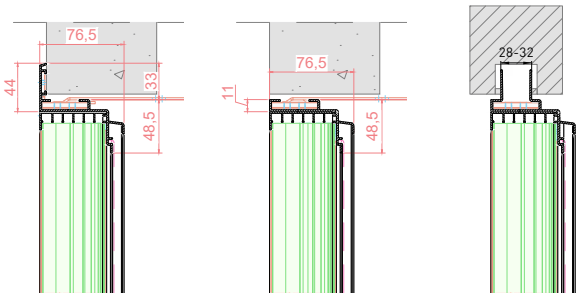

G 60HP Vertical
Recessed wall louvre with flange

N 60HP Vertical
Recessed wall louvre without flange

F 60HP Vertical
Window louvre

VENTILATION VALUES

Property		STND	+OPT
Visual free area		60 %	n/a
Physical free area		50 %	n/a
Ce (higher is better)		0,193	n/a
Cd (higher is better)		0,243	n/a
K-FACTOR (lower is better)	INTAKE	26,85	n/a
	EXHAUST	16,94	n/a

WATER RESISTANCE

Air velocity	Class	
	STND	+OPT
0 m/s	A	n/a
0,5 m/s	A	n/a
1 m/s	A	n/a
1,5 m/s	A	n/a
2 m/s	A	n/a
2,5 m/s	A	n/a

STND and +OPT version: see page 5

Insect protection: standard stainless steel mesh 2.3 x 2.3 mm, optional stainless steel mesh 6 x 6 mm or stainless steel mesh 20 x 20 mm

MORE INFO
→ **Dimensions & order information:** see page 51
→ **Full specifications:** see page 52

High Performance

Excellent water resistance

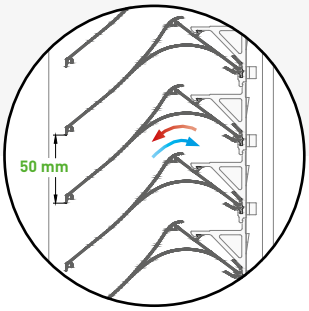

DucoGrille
Classic 130HP

The DucoGrille Classic 130HP has been specially developed for **purge ventilation**. The uniquely shaped 'High Performance' louvre blade with a low resistance factor provides a combination of **very good air flow** together with **excellent water resistance (class A)**. All types are manufactured from extruded aluminium sections. Insect mesh is fitted as standard.

water resistance
CLASS A
up to 2.5 m/s

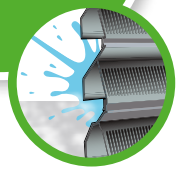

FRAME TYPES AND DIMENSIONS

Dimensions in mm	G	N
Louvre pitch	50	
Installation depth	158	165
Frame rebate	48	0
Min. dimensions	min. W 250 x H 250	
Louvre blade holders	Plastic Metal Clip Reaction to fire A2-s1,d0 (EN13501-1)	

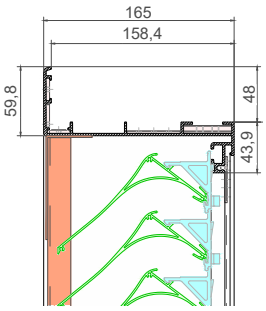

G 130HP
Recessed wall louvre
with flange

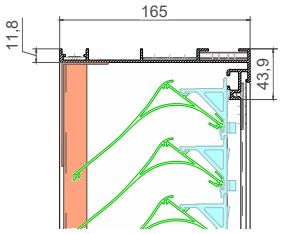

N 130HP
Recessed wall louvre
without flange

VENTILATION VALUES

Property		STND	+OPT
Visual free area		88 %	n/a
Physical free area		70 %	n/a
Ce (higher is better)		0,333	n/a
Cd (higher is better)		0,284	n/a
K-FACTOR (lower is better)	INTAKE	9,02	n/a
	EXHAUST	12,40	n/a

WATER RESISTANCE

Air velocity	Class	
	STND	+OPT
0 m/s	A	n/a
0,5 m/s	A	n/a
1 m/s	A	n/a
1,5 m/s	A	n/a
2 m/s	A	n/a
2,5 m/s	A	n/a

STND and +OPT version: see page 5

Insect protection: standard stainless steel mesh 2.3 x 2.3 mm, optional stainless steel mesh 6 x 6 mm or stainless steel mesh 20 x 20 mm

MORE INFO
→ **Dimensions & order information:** see page 51
→ **Full specifications:** see page 52

High Performance Good water resistance

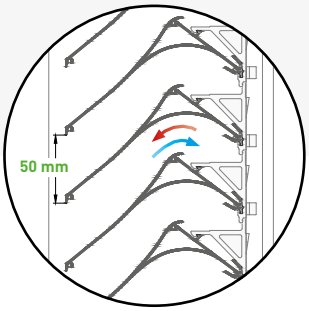

DucoGrille
Classic 130HP Basic

The DucoGrille Classic 130HP Basic has been specially developed for **purge ventilation**. The uniquely shaped 'High Performance' louvre blade with a low resistance factor provides a combination of **very good airflow** together with **good water resistance**. All types are manufactured from extruded aluminium sections. Insect mesh is fitted as standard.

FRAME TYPES AND DIMENSIONS

Dimensions in mm	G	N
Louvre pitch	50	
Installation depth	158	165
Frame rebate	48	0
Min. dimensions	min. W 250 x H 250	
Louvre blade holders	Plastic Metal Clip Reaction to fire A2-s1,d0 (EN13501-1)	

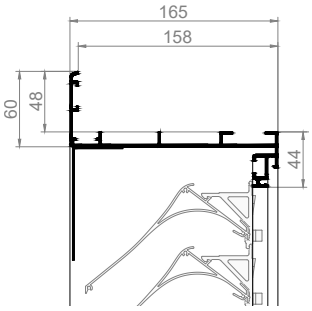

G 130HP Basic
Recessed wall louvre
with flange

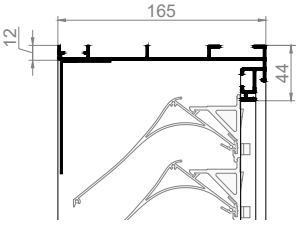

N 130HP Basic
Recessed wall louvre
without flange

VENTILATION VALUES

Property		STND	+OPT
Visual free area		88 %	n/a
Physical free area		70 %	n/a
Ce (higher is better)		0,321	n/a
Cd (higher is better)		0,276	n/a
K-FACTOR (lower is better)	INTAKE	9,70	n/a
	EXHAUST	13,13	n/a

WATER RESISTANCE

Air velocity	Class	
	STND	+OPT
0 m/s	A	n/a
0,5 m/s	A	n/a
1 m/s	A	n/a
1,5 m/s	B	n/a
2 m/s	B	n/a
2,5 m/s	C	n/a

STND and +OPT version: see page 5

Insect protection: standard stainless steel mesh 2.3 x 2.3 mm, optional stainless steel mesh 6 x 6 mm or stainless steel mesh 20 x 20 mm

MORE INFO
→ **Dimensions & order information:** see page 51
→ **Full specifications:** see page 52

Good water resistance

Penetration safe

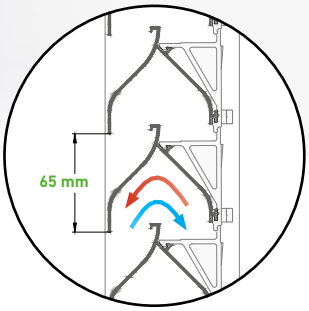

DucoGrille
Classic 70V

DucoGrille Classic G 70V is a recessed wall louvre manufactured from extruded aluminium sections. Insect mesh is fitted as standard. The unique **"V"-shaped blade** ensures better water resistance and makes the louvre grille 'penetration-proof' and difficult to see through from the outside.

FRAME TYPES AND DIMENSIONS

Dimensions in mm	G
Louvre pitch	65
Installation depth	82
Frame rebate	48
Min. dimensions	min. W 300 x H 300

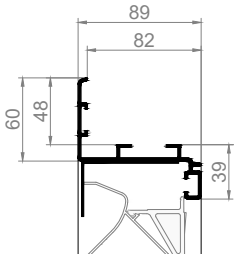

G 70V
Recessed wall louvre
with flange

VENTILATION VALUES

Property		STND	+OPT
Visual free area		65 %	65 %
Physical free area		36 %	36 %
Ce (higher is better)		0,117	0,111
Cd (higher is better)		0,109	0,103
K-FACTOR (lower is better)	INTAKE	73,05	81,16
	EXHAUST	84,17	94,26

WATER RESISTANCE

Air velocity	Class	
	STND	+OPT
0 m/s	B	A
0,5 m/s	B	B
1 m/s	B	B
1,5 m/s	C	C
2 m/s	D	D
2,5 m/s	D	D

STND and +OPT version: see page 5

Insect protection: standard stainless steel mesh 2.3 x 2.3 mm, optional stainless steel mesh 6 x 6 mm or stainless steel mesh 20 x 20 mm

MORE INFO
→ Dimensions & order information: see page 51
→ Full specifications: see page 52

Good water resistance

Penetration safe

DucoGrille
Classic 70V Vertical

DucoGrille Classic G 70V Vertical is a recessed wall louvre made of aluminium extrusion profiles. DucoGrille Classic G 70V Vertical is a variant of the DucoGrille Classic G 70V, but with vertical louvres. Insect mesh is fitted as standard. The unique **"V"-shaped blade** ensures better water resistance and makes the louvre grille 'penetration-proof' and difficult to see through from the outside.

FRAME TYPES AND DIMENSIONS

Dimensions in mm	G
Louvre pitch	65
Installation depth	82
Frame rebate	48
Min. dimensions	min. W 300 x H 300

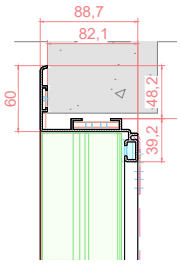

G 70V Vertical
Recessed wall louvre
with flange

VENTILATION VALUES

Property		STND	+OPT
Visual free area		65 %	65 %
Physical free area		36 %	36 %
Ce (higher is better)		0,117	0,111
Cd (higher is better)		0,109	0,103
K-FACTOR (lower is better)	INTAKE	73,05	81,16
	EXHAUST	84,17	94,26

WATER RESISTANCE

Air velocity	Class	
	STND	+OPT
0 m/s	A	A
0,5 m/s	A	A
1 m/s	A	A
1,5 m/s	C	A
2 m/s	C	A
2,5 m/s	D	C

STND and +OPT version: see page 5

Insect protection: standard stainless steel mesh 2.3 x 2.3 mm, optional stainless steel mesh 6 x 6 mm or stainless steel mesh 20 x 20 mm

MORE INFO
→ Dimensions & order information: see page 51
→ Full specifications: see page 52

DucoGrille **Classic** 20Z

The Cube | Almere (Netherlands) | KOW Architecture

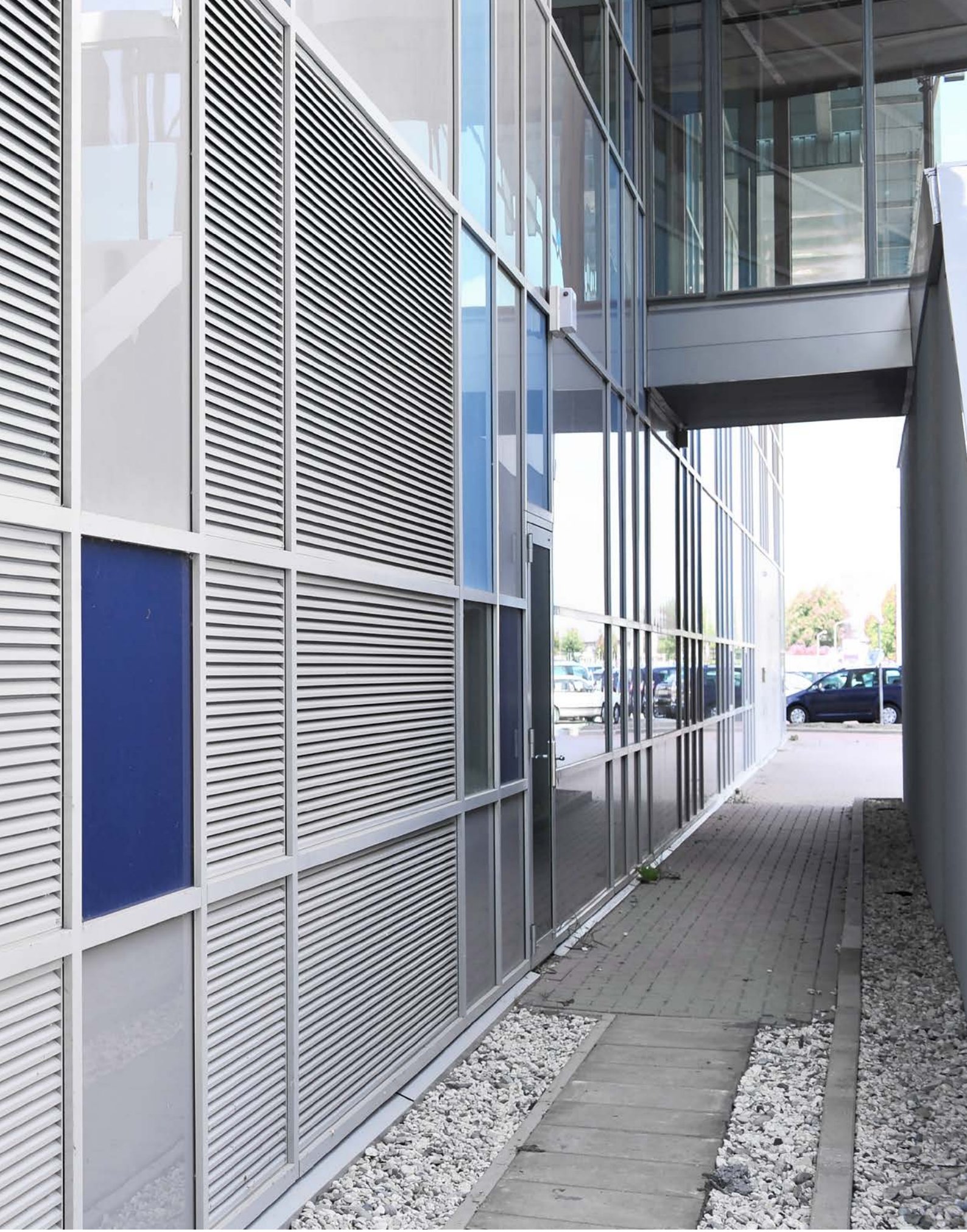

Suitable for moderate noise levels

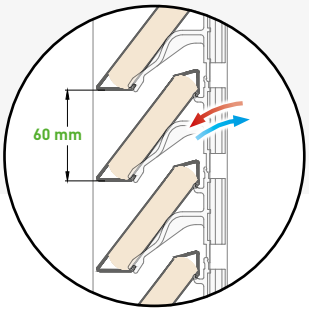

75L

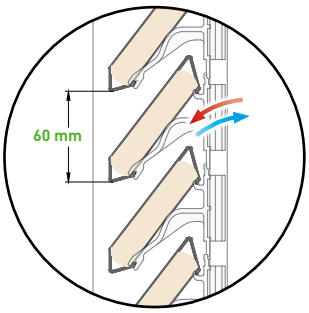

75Z

DucoGrille
Acoustic 75Z & 75L

DucoGrille Acoustic G 75Z & G 75L are sound-absorbing recessed wall louvres manufactured from extruded aluminium sections. One type of louvre blade offers the option of **two different looks**: Z and L. The louvre blades have **sound-absorbing, non-combustible mineral wool** inside.

FRAME TYPES AND DIMENSIONS

Dimensions in mm	G
Louvre pitch	60
Installation depth	82
Frame rebate	48
Min. dimensions	min. W 250 x H 250

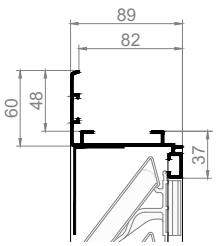

G 75Z
Recessed wall louvre with flange

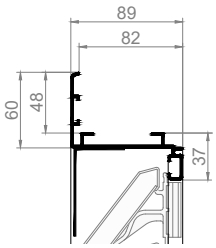

G 75L
Recessed wall louvre with flange

SOUND ABSORPTION

Attenuation value Rw (C;Ctr) in dB	
75Z	75L
6 (0;-1)	6 (0;-2)

VENTILATION VALUES

Property		75Z		75L	
		STND	+OPT	STND	+OPT
Visual free area		76 %	76 %	95 %	95 %
Physical free area		28 %	28 %	28 %	28 %
Ce (higher is better)		0,243	0,196	0,246	0,209
Cd (higher is better)		0,214	0,182	0,287	0,254
K-FACTOR (lower is better)	INTAKE	16,94	26,03	16,52	22,89
	EXHAUST	21,84	30,19	12,14	15,50

WATER RESISTANCE

Air velocity	Class			
	75Z		75L	
	STND	+OPT	STND	+OPT
0 m/s	B	B	B	B
0,5 m/s	B	B	C	B
1 m/s	C	C	C	C
1,5 m/s	D	C	D	D
2 m/s	D	D	D	D
2,5 m/s	D	D	D	D

STND and +OPT version: see page 5

Insect protection: standard stainless steel mesh 2.3 x 2.3 mm, optional stainless steel mesh 6 x 6 mm or stainless steel mesh 20 x 20 mm

MORE INFO
→ Dimensions & order information: see page 51
→ Full specifications: see page 52
→ STND and +OPT version: see page 5

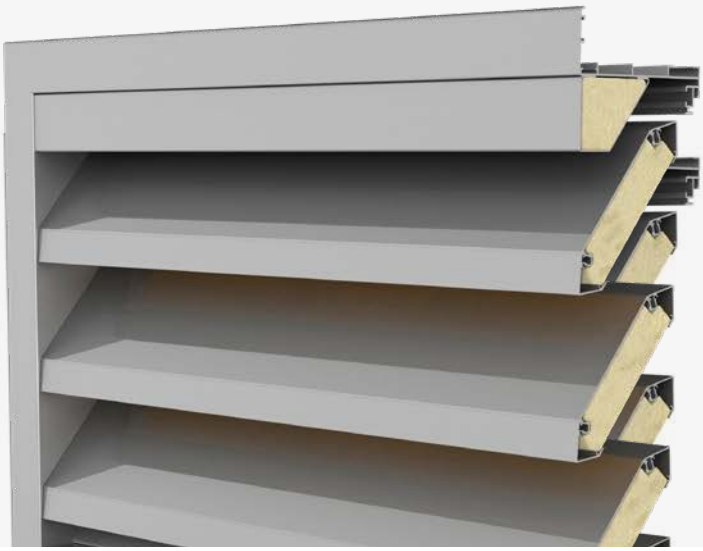

Suitable for high noise levels

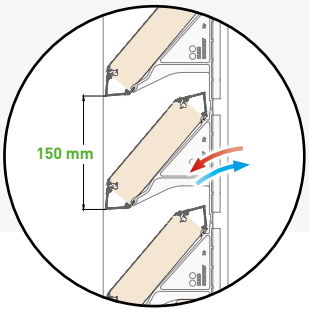

DucoGrille **Acoustic** 150

The DucoGrille Acoustic G150 / N150 is a sound absorbing recessed wall louvre manufactured from extruded aluminium sections. The louvre blades have **sound-absorbing, non-combustible mineral wool** inside. Thanks to its heavy-duty construction, the DucoGrille Acoustic G150 / N150 has a **high attenuation value plus a low resistance factor** (and consequently better flow rates).

FRAME TYPES AND DIMENSIONS

Dimensions in mm	G	N
Louvre pitch	150	
Installation depth	158	165
Frame rebate	48	0
Min. dimensions	min. W 250 x H 250	

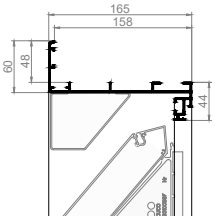

G 150
Recessed wall louvre **with** flange

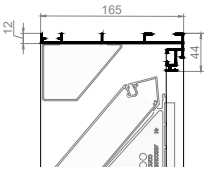

N 150
Recessed wall louvre **without** flange

SOUND ABSORPTION

Attenuation value Rw (C;Ctr) in dB
11 (-1;-2)

VENTILATION VALUES

Property		STND	+OPT
Visual free area		74 %	n/a
Physical free area		35 %	n/a
Ce (higher is better)		0,295	n/a
Cd (higher is better)		0,296	n/a
K-FACTOR (lower is better)	INTAKE	11,49	n/a
	EXHAUST	11,41	n/a

WATER RESISTANCE

Air velocity	Class STND	Class +OPT
0 m/s	B	n/a
0,5 m/s	C	n/a
1 m/s	C	n/a
1,5 m/s	C	n/a
2 m/s	D	n/a
2,5 m/s	D	n/a

STND and +OPT version: see page 5

Insect protection: standard stainless steel mesh 2.3 x 2.3 mm, optional stainless steel mesh 6 x 6 mm or stainless steel mesh 20 x 20 mm

MORE INFO
→ **Dimensions & order information:** see page 51
→ **Full specifications:** see page 52

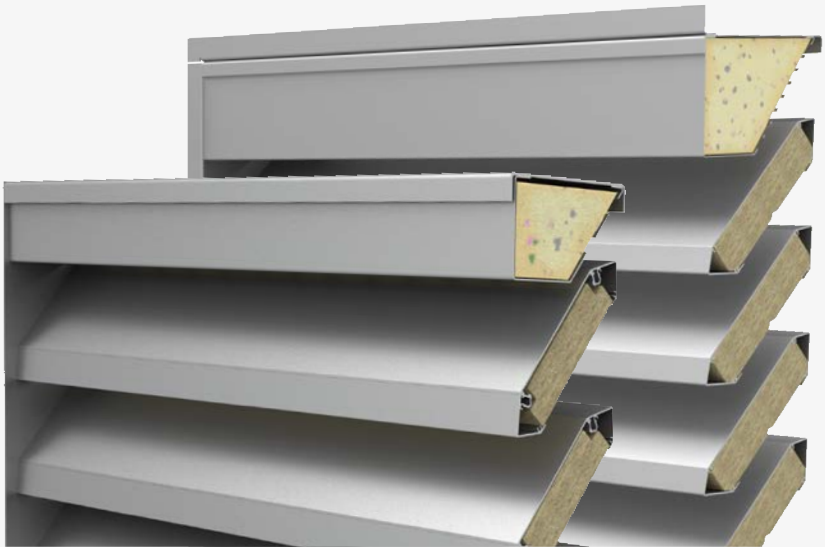

Fall-through protection

Impact protection

Suitable for low to moderate noise levels

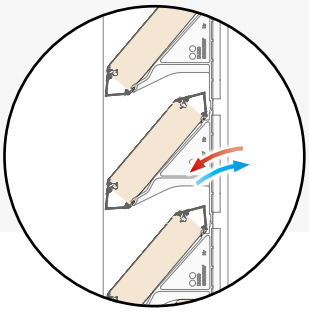

Duco **Acoustic** Panel 150 & 250

Duco Acoustic Panel is a sound absorbing recessed mounted wall louvre, manufactured from aluminium extrusion profiles. It is extremely suitable for housing and residential applications. The louvre blades are fitted with sound absorbing, non-combustible mineral wool and offer an **excellent sound reduction index**. The louvre blades in these variants are arranged in a single row and are ideal for projects with low noise levels.

Duco Acoustic Panel grilles meet the BS 6180 standard (class XI) for **fall-through protection** and class 5 of EN 13049 for **impact protection**. See page 46-47 for more information.

attenuation value
14 dB
with Acoustic Panel 250

FRAME TYPES AND DIMENSIONS

Dimensions in mm	150	250
Louvre pitch	130	150
Installation depth	158	250
Frame rebate	37	37
Min. dimensions	W 250 x H 280	W 250 x H 325

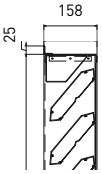

150

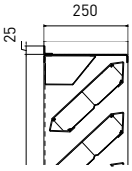

250

SOUND ABSORPTION

Attenuation value Rw (C;Ctr) in dB
150: 11 (-1;-2) **250: 14 (-1;-2)**

VENTILATION VALUES

Property		150		250	
		STND	+OPT	STND	+OPT
Visual free area		71 %	71 %	75 %	75 %
Physical free area		31 %	31 %	31 %	31 %
Ce (higher is better)		0,304	0,280	0,278	0,250
Cd (higher is better)		0,297	0,282	0,275	0,240
K-FACTOR (lower is better)	INTAKE	10,82	12,76	12,94	16,00
	EXHAUST	11,34	12,57	13,22	17,36

WATER RESISTANCE

Air velocity	Class			
	150		250	
	STND	+OPT	STND	+OPT
0 m/s	C	C	C	B
0,5 m/s	D	D	D	C
1 m/s	D	D	D	D
1,5 m/s	D	D	D	D
2 m/s	D	D	D	D
2,5 m/s	D	D	D	D

STND and +OPT version: see page 5

Insect protection: optional stainless steel mesh 2.3 x 2.3 mm, stainless steel mesh 6 x 6 mm or stainless steel mesh 20 x 20 mm

MORE INFO
→ **Dimensions & order information:** see page 51
→ **Full specifications:** see page 52
→ **Impact & fall-through protection:** see page 46-47

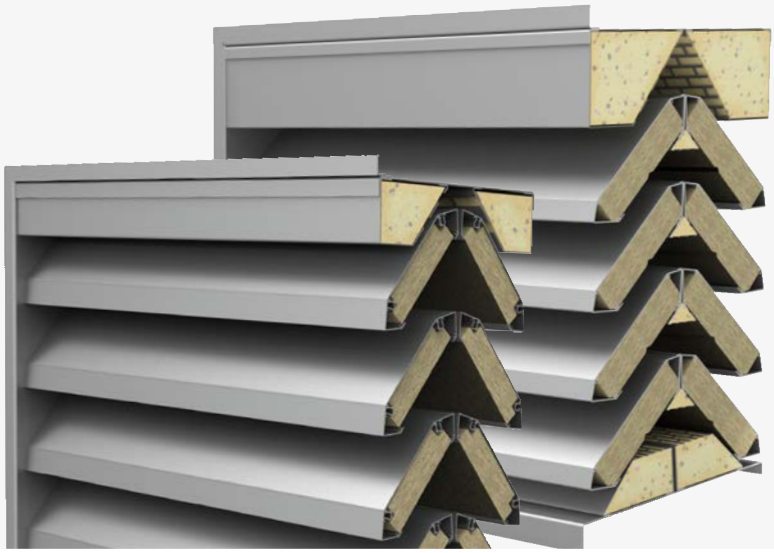

Fall-through protection

Impact protection

Suitable for high noise levels

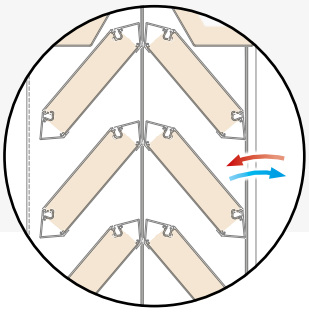

Duco **Acoustic** Panel 300(HP) & 500HP

In these variants, the louvre blades are arranged in a double row. This makes these grilles ideal for projects with **high noise levels**.

The HP variants provide improved airflow, while maintaining attenuation. This variant has been added as an option for the Duco Acoustic Panel 300, while it is the standard version for the new Duco Acoustic Panel 500HP.

attenuation value
21 dB
with Acoustic Panel 500HP

FRAME TYPES AND DIMENSIONS

Dimensions in mm	300(HP)	500HP
Louvre pitch	130	150
Installation depth	303	467
Frame rebate	37	37
Min. dimensions	W 250 x H 280	W 250 x H 325

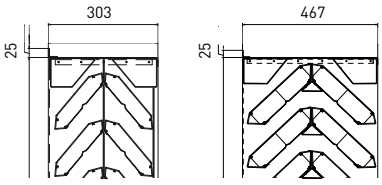

300 500HP

SOUND ABSORPTION

Attenuation value Rw (C;Ctr) in dB
300(HP): 17 (-1;-4) 500HP: 21 (-2;-5)

VENTILATION VALUES

Property		300		300HP		500HP	
		STND	+OPT	STND	+OPT	STND	+OPT
Visual free area		71 %	71 %	71 %	71 %	75 %	75 %
Physical free area		31 %	31 %	31 %	31 %	31 %	31 %
Ce (higher is better)		0,236	0,226	0,250	0,241	0,256	0,244
Cd (higher is better)		0,231	0,222	0,244	0,235	0,248	0,237
K-FACTOR (lower is better)	INTAKE	17,95	19,58	16,00	17,22	15,26	16,80
	EXHAUST	18,74	20,29	16,80	18,11	16,26	17,80

WATER RESISTANCE

Air velocity	Class					
	300		300HP		500HP	
	STND	+OPT	STND	+OPT	STND	+OPT
0 m/s	C	C	C	C	C	C
0,5 m/s	D	D	C	C	C	D
1 m/s	D	D	D	D	D	D
1,5 m/s	D	D	D	D	D	D
2 m/s	D	D	D	D	D	D
2,5 m/s	D	D	D	D	D	D

STND and +OPT version: see page 5

Insect protection: optional stainless steel mesh 2.3 x 2.3 mm, stainless steel mesh 6 x 6 mm or stainless steel mesh 20 x 20 mm

MORE INFO
→ Dimensions & order information: see page 51
→ Full specifications: see page 52
→ Impact & fall-through protection: see page 46-47

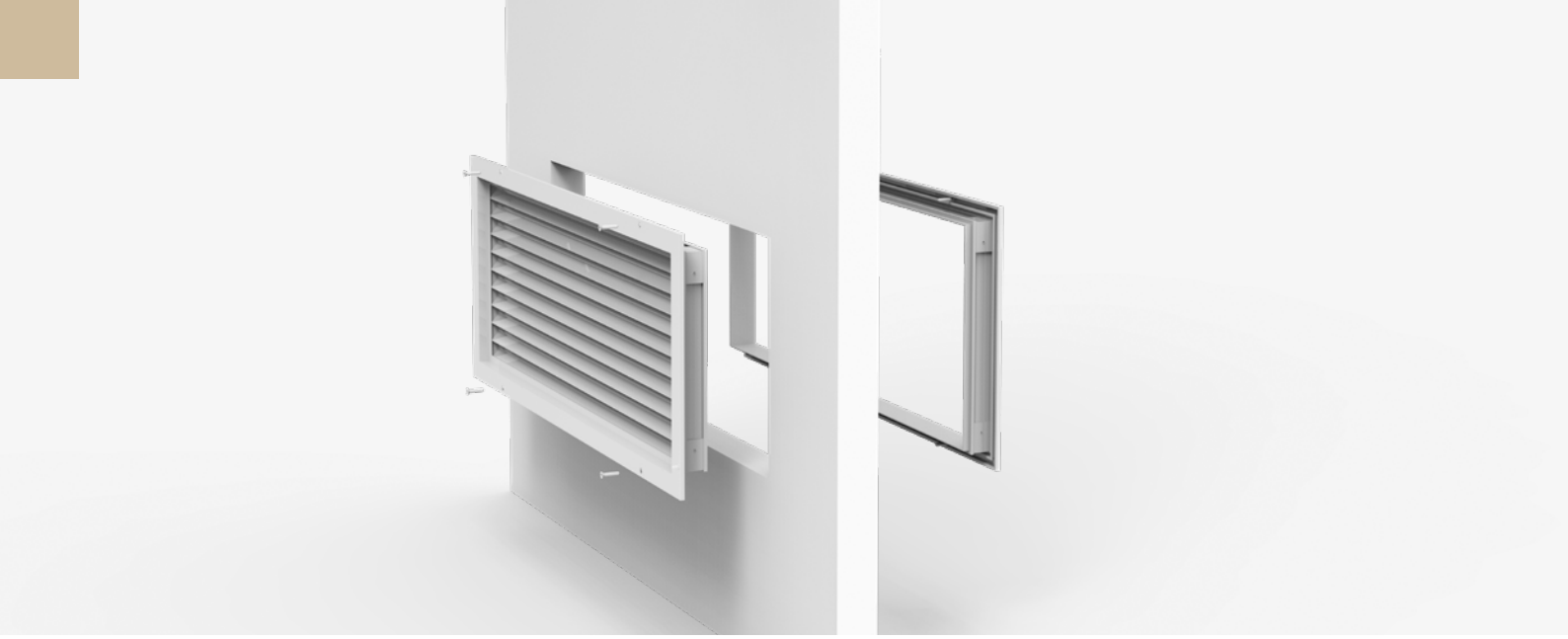

DucoGrille **Transfer**

This transfer grille with 20V louvre blades can easily be installed in **doors and walls**. The **frame depth can be adjusted**. The grille can be fitted **with or without a counterframe**. The DucoGrille Transfer is ideally suited for **larger air flows** between interior spaces, but can also be used between interior and exterior spaces (e.g. exterior doors).

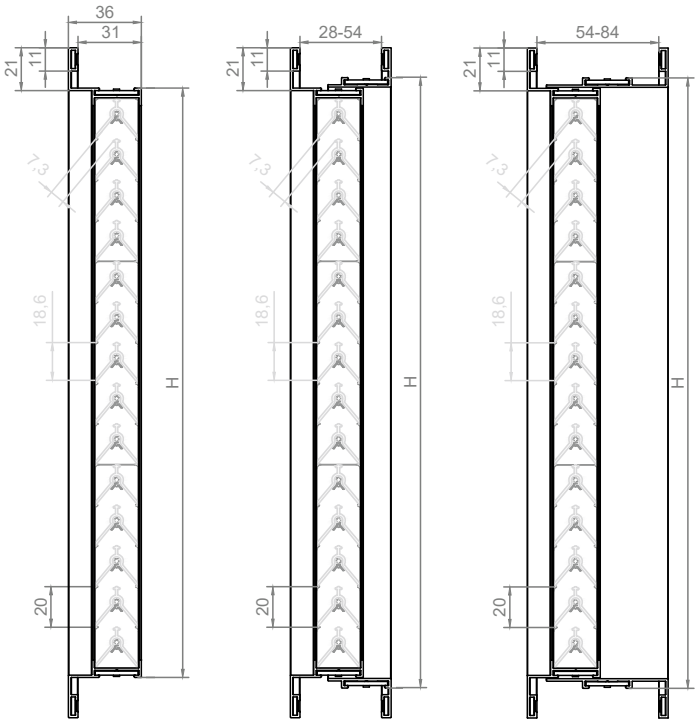

Without counterframe | **With counterframe** 28-54 mm depth | **With counterframe** 54-84 mm depth

FRAME TYPES AND DIMENSIONS

Dimensions in mm

Louvre pitch	20
Recess depth (with counterframe)	28 - 84 mm
Frame rebate	21 mm

VENTILATION VALUES

Property		STND	+OPT
Visual free area		95 %	n/a
Physical free area		34 %	n/a
Ce (higher is better)		0,155	n/a
Cd (higher is better)		0,155	n/a
K-FACTOR (lower is better)	INTAKE	41,62	n/a
	EXHAUST	41,62	n/a

STND and +OPT version: see page 5

WATER RESISTANCE

Air velocity	Class	
	STND	+OPT
0 m/s	A	n/a
0,5 m/s	B	n/a
1 m/s	C	n/a
1,5 m/s	D	n/a
2 m/s	D	n/a
2,5 m/s	D	n/a

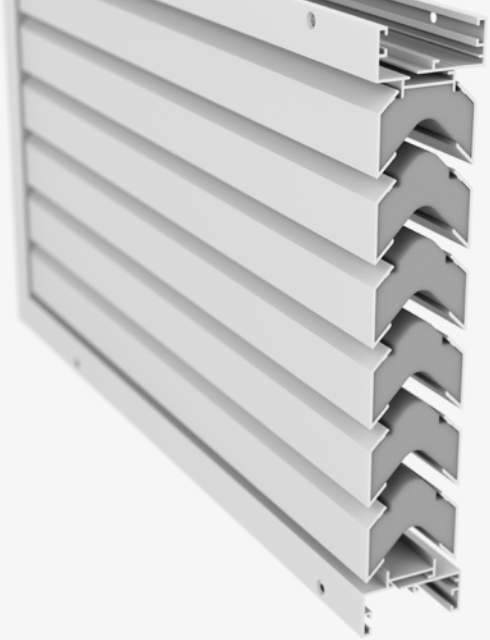

Suitable for moderate noise levels

DucoGrille
Transfer Acoustic

DucoGrille Transfer Acoustic is an **acoustic transfer grille** which fits easily into doors and walls. The frame depth can be adjusted. The grille is available **with or without a counterframe**. Thanks to the acoustic louvre blades, the DucoGrille Transfer Acoustic is ideally suited for use between multiple internal and external spaces (e.g. outside doors).

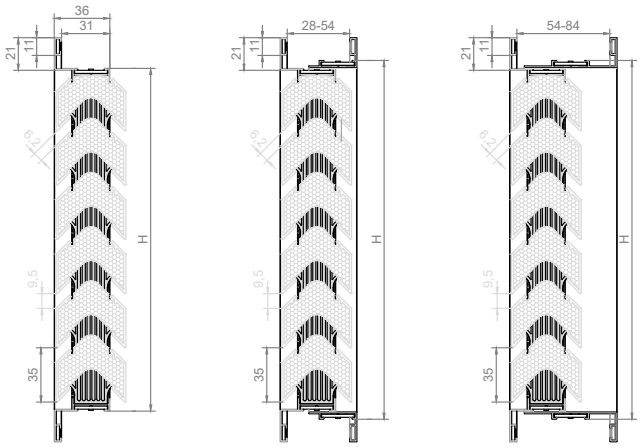

Without counterframe | **With counterframe** 28-54 mm depth | **With counterframe** 54-84 mm depth

VENTILATION VALUES

Property		STND	+OPT
Visual free area		27 %	n/a
Physical free area		18 %	n/a
Ce (higher is better)		0,083	n/a
Cd (higher is better)		0,082	n/a
K-FACTOR (lower is better)	INTAKE	145,16	n/a
	EXHAUST	148,72	n/a

WATER RESISTANCE

Air velocity	Class	
	STND	+OPT
0 m/s	A	n/a
0,5 m/s	A	n/a
1 m/s	C	n/a
1,5 m/s	D	n/a
2 m/s	D	n/a
2,5 m/s	D	n/a

STND and +OPT version: see page 5

FRAME TYPES AND DIMENSIONS

Dimensions in mm

Louvre pitch	35
Recess depth (with counterframe)	28 - 84 mm
Frame rebate	21 mm

SOUND ABSORPTION

Dimensions, WxH in mm	245x115	320x220	440x325	440x430	765x535
Frequency (Hz)	**dB**	**dB**	**dB**	**dB**	**dB**
63	6,0	3,8	1,6	2,5	2,3
125	9,9	8,1	6,1	6,6	5,4
250	18,8	11,8	8,1	8,5	7,6
500	11,3	5,9	4,0	4,1	4,3
1000	9,1	6,5	3,3	4,9	4,8
2000	15,7	12,4	9,0	10,4	10,9
4000	24,7	21,9	18,7	20,1	20,7
Rw (C;Ctr)	13(-1;-2)	9(0;-1)	6(0;-1)	7(0;-1)	7(0;-1)

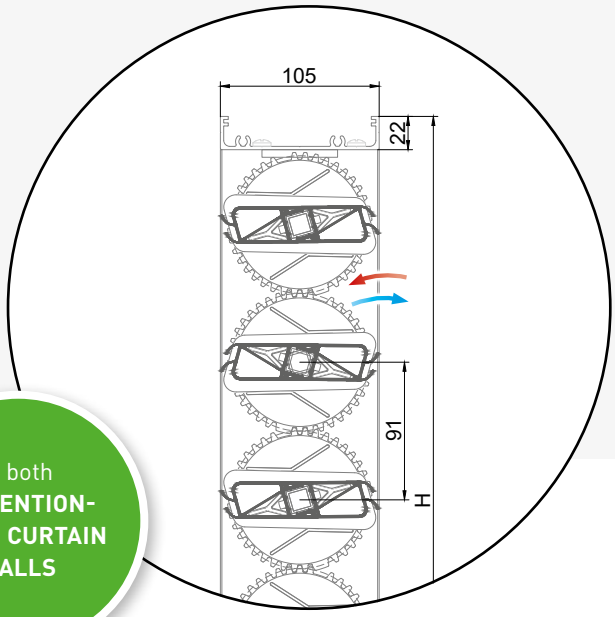

In both **CONVENTIONAL** and **CURTAIN WALLS**

DucoGrille **Close** 105

The DucoGrille Close 105 is a **motorised multileaf damper** with large air passage, tailor-made for offices and schools. The multileaf damper can be used both as a supply and exhaust grille. In the first case, the DucoGrille Close 105 can be built into a **wall or curtain wall** and a wall louvre on both sides, which may or may not be burglar resistant, ensures an aesthetic finish. With a limited depth of just 105 mm, the multileaf damper can easily be installed in smaller rooms, both horizontally and vertically.

→ DucoGrille Close 105 louvres in closed position

Moreover, the multileaf damper can also serve as an **adjustable central exhaust unit**, for example in combination with DUCO's roof turrets. Thanks to the high airflow rate, the DucoGrille Close 105 is also ideal for use in providing intensive ventilation or as part of the **(night) cooling systems** of a building.

The DucoGrille Close 105 can be fitted with **different types of motor** (including **Spring Return** motors as well).

→ DucoGrille Close 105 possibility of recessed curtain wall

VENTILATION VALUES

Property		STND	+OPT
Visual free area		74 %*	n/a
Physical free area		74 %*	n/a
Ce (higher is better)		0,624*	n/a
Cd (higher is better)		0,624*	n/a
K-FACTOR (lower is better)	INTAKE	2,57*	n/a
	EXHAUST	2,57*	n/a

* Values measured without internal and external louvre grille.

STND and +OPT version: see page 5

WATER RESISTANCE

Air velocity	Class	
	STND	+OPT
0 m/s	n/a	n/a
0,5 m/s	n/a	n/a
1 m/s	n/a	n/a
1,5 m/s	n/a	n/a
2 m/s	n/a	n/a
2,5 m/s	n/a	n/a

MORE INFO
→ **Dimensions & order information:** see page 51
→ **Full specifications:** see page 52

FRAME TYPES AND DIMENSIONS

Dimensions	min. 258 mm up to max. of 3000 mm (incremental by 1 mm) **Width and height interdependent, see graph opposite**
Depth	105 mm
Louvre pitch	91 mm
Airflow	805 l/s/m² at 1 Pa 1200 l/s/m² at 2 Pa
Air density (in closed position)	Qn50 = 0.79 m³/h/m
Water-tightness (in closed position)	Watertight (EN 1027)
Insulation value	U < 1 W/m²K
Motor noise	35 dB(A) - 45 dB(A)
Operating temperature	-25 °C up to +60 °C
Control	GBS
Motors	Different types, please refer to the technical data sheet at **www.duco.eu**.

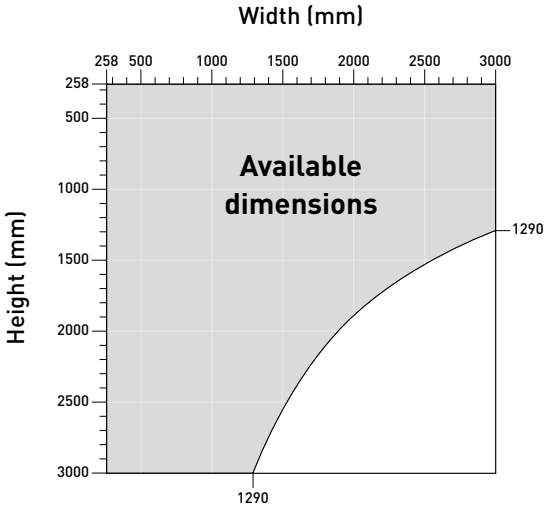

1

External louvre grille

+

2

DucoGrille Close 105

+

3

Internal louvre grille

1 3

Louvre grille

The DucoGrille Close 105 can be combined with **DucoGrille Solid** and **DucoGrille Classic** louvre grilles on the inside and outside.

2

Close 105 multileaf damper

The DucoGrille Close 105 can be controlled fully automatically.

PRE-ASSEMBLY

The **DucoGrille Close 105** is available 'pre-assembled' with the **DucoGrille Solid 30Z** external louvre grille in two types: **G 30Z** (recessed wall louvre with flange) and **F 30Z** (window louvre). This pre-assembled external louvre grille with multileaf damper can be installed quickly and easily.

MORE INFO
→ **Dimensions & order information:** see page 51
→ **Full specifications:** see page 52

MANUAL
or
MOTORISED

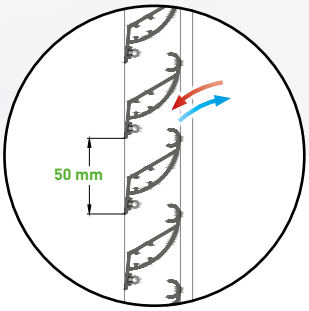

DucoGrille
Close 35Z

DucoGrille Close G 35Z and N 35Z are closable recessed wall louvres manufactured from extruded aluminium sections. The DucoGrille Close is also available as a closable window louvre (F 35Z), ideal when using Night Cooling. The unique **"Z"-shaped louvre blades** provide adjustable ventilation via **manual or electric operation**.

→ Manual stepless operation:
left, centre or right of the grille, as preferred

FRAME TYPES AND DIMENSIONS

Dimensions in mm		G	N	F
Louvre pitch		50		
Installation depth		45	45	-
Frame rebate		20	0	-
Flange width		-	-	24/28
Frame depth		-	-	45
Minimum height	MANUAL OPERATION	224*	224*	264*
	ELECTRONIC OPERATION	524*	524*	564*

* height to be determined in 50-mm steps

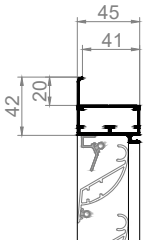

G 35Z
Recessed wall louvre **with** flange

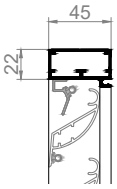

N 35Z
Recessed wall louvre **without** flange

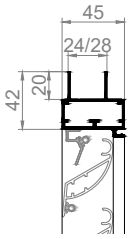

F 35Z
Window louvre

VENTILATION VALUES

Property		STND	+OPT
Visual free area		51 %	n/a
Physical free area		39 %	n/a
Ce (higher is better)		0,182	n/a
Cd (higher is better)		0,206	n/a
K-FACTOR (lower is better)	INTAKE	30,19	n/a
	EXHAUST	23,56	n/a

WATER RESISTANCE

Air velocity	Class	
	STND	+OPT
0 m/s	B	n/a
0,5 m/s	B	n/a
1 m/s	C	n/a
1,5 m/s	D	n/a
2 m/s	D	n/a
2,5 m/s	D	n/a

STND and +OPT version: see page 5

Insect protection: standard stainless steel mesh 2.3 x 2.3 mm, optional stainless steel mesh 6 x 6 mm or stainless steel mesh 20 x 20 mm

MORE INFO
→ **Dimensions & order information:** see page 51
→ **Full specifications:** see page 52

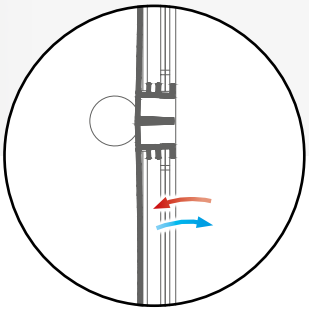

DucoGrille
Close M 100

DucoGrille Close M 100 is a closable surface mounted internal louvre grille manufactured from extruded aluminium sections. The plastic slides provide **adjustable ventilation**. The DucoGrille Close M 100 is available as standard with heights of 200 or 300 mm and the width can vary up to a maximum of 1,000 mm.

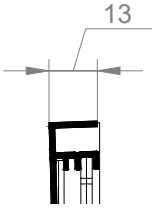

M 100
Surface mounted wall louvre

DIMENSIONS

Frame depth	13 mm
Height of the grille	200 or 300 mm
Width of the grille	max.: 1000 mm

VENTILATION VALUES

Property		STND	+OPT
Visual free area		28 %	n/a
Physical free area		28 %	n/a
Ce (higher is better)		0,106	n/a
Cd (higher is better)		0,106	n/a
K-FACTOR (lower is better)	INTAKE	89,00	n/a
	EXHAUST	89,00	n/a

STND and +OPT version: see page 5

AIR FLOW

Dimension	200 x 200	300 x 300
Airflow at 1 Pa (m³/h)	19,76	44,48
Airflow at 2 Pa (m³/h)	27,96	62,90

INSECT SCREEN

Fine punching acts as an insect screen

MORE INFO
→ Dimensions & order information: see page 51
→ Full specifications: see page 52

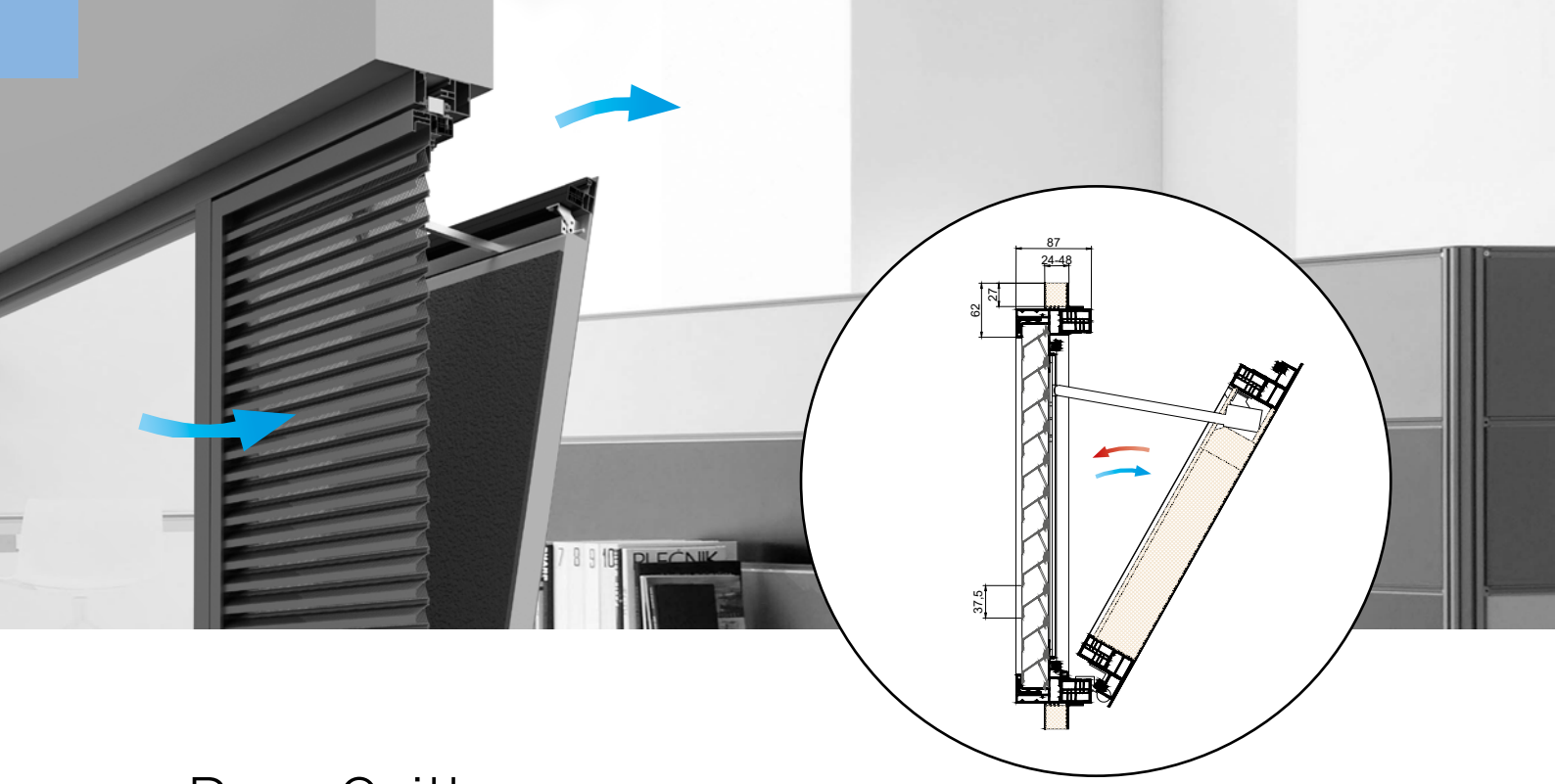

DucoGrille
NightVent

The DucoGrille NightVent is a **glass-replacing ventilation hatch** that provides efficient cooling of any building thanks to the supply of **large ventilation flow rates**.

The ventilation hatch consists of **a single module**, although it contains two essential components. From outside, the DucoGrille NightVent is protected by a window louvre with perforated louvre blades (**DucoGrille Solid 30Z P1**) that act as an insect screen. On the inside, **an insulated opening panel** with a flat-finished inner panel makes for easy integration into the interior. In addition, the **acoustic attenuation** ensures that the thermal value of the ventilation hatch is comparable to that of a closed window.

The ventilation hatch can be **hinged horizontally or vertically**. The inner and outer panels can be finished in various colours. DucoGrille NightVent is available in **motorised and manual versions**.

The DucoGrille NightVent has been tested under the applicable European regulations by means of intensive tests covering wind and water resistance. In addition, the external louvre grille is also available in a vandal-proof or burglary-resistant version **up to RC2 class**.

VENTILATION VALUES

Property		STND	+OPT
Visual free area		60 %	n/a
Physical free area		34 %	n/a
Ce (higher is better)		0,202	n/a
Cd (higher is better)		0,202	n/a
K-FACTOR (lower is better)	INTAKE	24,51	n/a
	EXHAUST	24,51	n/a

STND and +OPT version: see page 5

WATER RESISTANCE

Air velocity	Class	
	STND	+OPT
0 m/s	A	n/a
0,5 m/s	B	n/a
1 m/s	C	n/a
1,5 m/s	D	n/a
2 m/s	D	n/a
2,5 m/s	D	n/a

INSECT SCREEN

Fine punching keeps insects out. Stainless steel mesh can be fitted as an option.

DIMENSIONS AND PROPERTIES

	Motorised	Manual
Louvre pitch	37,5 mm	
Flange width	24 / 28 / 32 / 36 / 40 / 44 / 48	
Frame depth	115 mm	
Airflow	369 l/s/m² at 2 Pa	
Air density (when closed)	Qn50 = 4,5 m³/h/m²	
Water resistance (when closed)	Class 9a (EN 12208-EN1027)	
Attenuation value	Rw open position (C;Ctr) = 10 (0,-1) dB Rw closed position (C;Ctr) = 33 (-1,-4) dB	
Insulation value	U = 1.5 W/m²K	
Motor noise	< 35 dB (A)	n/a
Operating temperature	-25 °C up to +60 °C	n/a
Min. / max. dimensions	see tables on p. 40	
Operation		

If a motorised system is chosen, a remote control can open / close the ventilation hatch, alternatively the ventilation hatch can be linked to the building management system (BMS).

With the manual version, the ventilation hatch is fitted with one or two handles.

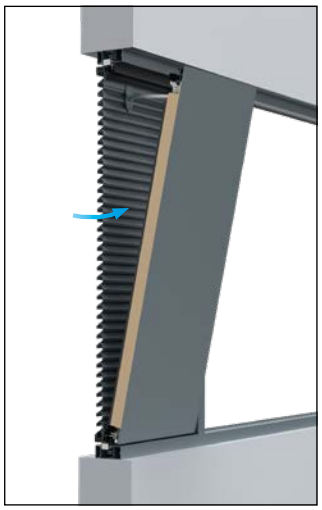

→ Inside view

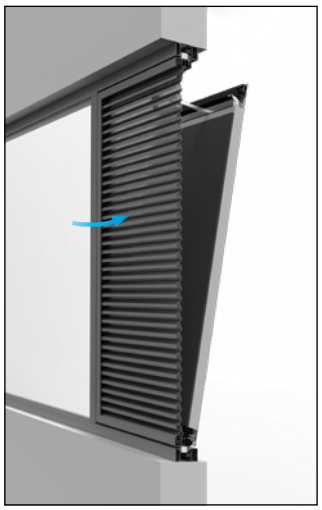

→ Outside view

BURGLAR RESISTANT

The DucoGrille NightVent is vandal-proof and can optionally be burglar resistant up to RC2 class (according to NEN 5096:2012 & EN 1627:2011).

MORE INFO
→ **Dimensions & order information:** see page 51
→ **Full specifications:** see page 52

Available dimensions

The minimum and maximum dimensions of the **DucoGrille NightVent** depend on the version.

DucoGrille NightVent
MOTORISED

Width in cm

Height in cm	30	40	50	60	70	80	90	100	110	120	130	140	150	160	170	180	190	200	210	220	230	240	250
30						0	0	0	0	0	0	0	0	0	0	0	0	0	0	0	0	0	0
40				0	0	0	0	0	0	0	0	0	0	0	0	0	0	0	0	0	0	0	0
50				0	0	0	0	0	0	0	0	0	0	0	0	0	0	0	0	0	0	0	0
60		L/R	L/R	0	0	0	0	0	0	0	0	0	0	0	0	0	0	0	0	0	0	0	0
70		L/R	L/R	0	0	0	0	0	0	0	0	0	0	0	0	0	0	0	0	0	0	0	0
80	L/R	L/R	L/R	0	0	0	0	0	0	0	0	0	0	0	0	0	0	0	0	0	0	0	0
90	L/R	L/R	L/R	0	0	0	0	0	0	0	0	0	0	0	0	0	0	0	0	0	0	0	0
100	L/R	L/R	L/R	0	0	0	0	0	0	0	0	0	0	0	0	0	0						
110	L/R	L/R	L/R	0	0	0	0	0	0	0	0	0	0	0	0	0							
120	L/R	L/R	L/R	0	0	0	0	0	0	0	0	0	0	0	0								
130	L/R	L/R	L/R	0	0	0	0	0	0	0	0	0	0	0									
140	L/R	L/R	L/R	0	0	0	0	0	0	0	0	0	0										
150	L/R	L/R	L/R	0	0	0	0	0	0	0	0	0											
160	L/R	L/R	L/R	0	0	0	0	0	0	0	0												
170	L/R	L/R	L/R	0	0	0	0	0	0	0													
180	L/R	L/R	L/R	0	0	0	0	0	0														
190	L/R	L/R	L/R	0	0	0	0	0															
200	L/R	L/R	L/R	0	0	0	0																
210	L/R	L/R	L/R	0	0	0	0																
220	L/R	L/R	L/R	0	0	0	0																
230	L/R	L/R	L/R	0	0	0	0																
240	L/R	L/R	L/R	0	0	0	0																
250	L/R	L/R	L/R	0	0	0	0																

= size available = size **not** available size **L / R** = hinged left or right **0** = bottom hinged

DucoGrille NightVent
MANUAL

Width in cm

Height in cm	35	40	50	60	70	80	90	100	110	120	130	140	150	160	170	180	190	200	210	220	230	240	250
40	•	•	•	•	•	•	•	•	•	•	•	•	•	•	•	•	•	•	•	•	•	•	•
50	•	•	•	•	•	•	•	•	•	•	•	•	•	•	•	•	•	•	•	•	•	•	•
60	•	•	•	•	•	•	•	•	•	•	•	•	•	•	•	•	•	•	•	•	•	•	•
70	•	•	•	•	•	•	•	•	•	•	•	•	•	•	•	•	•	•	•	•	•	•	•
80	•	•	•	•	•	•	•	•	•	•	•	•	•	•	•	•	•	•	•	•	•	•	•
90	•	•	•	•	•	•	•	•	•	•	•	•	•	•	•	•	•	•	•	•	•	•	•
100	•	•	•	•	•	•	•	•	•	•	•	•	•	•	•	•	•						
110	•	•	•	•	•	•	•	•	•	•	•	•	•	•	•	•							
120	•	•	•	•	•	•	•	•	•	•	•	•	•	•	•								
130	•	•	•	•	•	•	•	•	•	•	•	•	•	•									
140	•	•	•	•	•	•	•	•	•	•	•	•	•										
150	•	•	•	•	•	•	•	•	•	•	•	•											
160	•	•	•	•	•	•	•	•	•	•	•												
170	•	•	•	•	•	•	•	•	•	•													
180	•	•	•	•	•	•	•	•	•														
190	•	•	•	•	•	•	•	•															
200	•	•	•	•	•	•	•																
210	•	•	•	•	•	•	•																
220	•	•	•	•	•	•	•																
230	•	•	•	•	•	•	•																
240	•	•	•	•	•	•	•																
250	•	•	•	•	•	•	•																

= size available = size **not** available • = one handle • = two handles

DucoGrille **NightVent**

Ceratec | Comines-Warneton (Belgium)

Duco **Roof Turret** Solid **30Z**

Duco Roof Turret Solid 30Z is an aluminium roof cowl. It provides aesthetic concealment of air vents. The roof cowl also ensures adequate **purge ventilation** of the screened areas and can be used in almost **all projects**. The perforated Solid 30Z louvre blades are the ideal solution for both insect resistance and ventilation capacity. Thanks to the large punching (P2), this **small roof cowl** achieves **high ventilation values**. The roof turrets are **made to measure** and provided with a sill at the bottom and a cover plate on top.

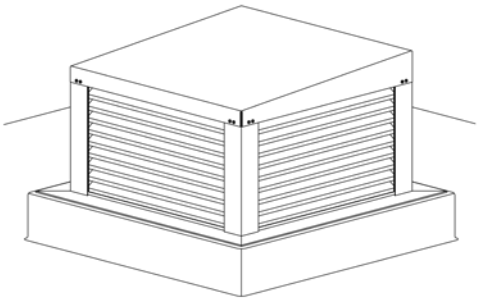

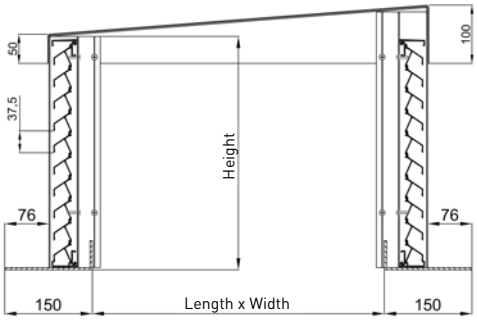

DIMENSIONS

Louvre pitch	37,5 mm
Roof turret length	Min. 200 mm - Max. 2630 mm (to be coupled)
Roof turret width	Min. 200 mm - Max. 1180 mm (to be coupled)
Roof turret height	Min. 255 mm - max. 1600 mm

VENTILATION VALUES

Property		P1	P2	P2 + ECG*
		STND	STND	STND
Visual free area		60 %	86 %	86 %
Physical free area		34 %	48 %	48 %
Ce (higher is better)		0,243	0,258	0,179
Cd (higher is better)		0,234	0,253	0,202
K-FACTOR (lower is better)	INTAKE	16,94	15,02	31,21
	EXHAUST	18,26	15,62	24,51

STND and +OPT version: see page 5

*ECG = Eggcrate grille (see page 43)

WATER RESISTANCE

Air velocity	Class		
	P1	P2	P2 + ECG*
	STND	STND	STND
0 m/s	B	C	A
0,5 m/s	C	C	A
1 m/s	C	C	A
1,5 m/s	D	D	B
2 m/s	D	D	C
2,5 m/s	D	D	C

Sill profile

The **Duco Roof Turret Solid 30Z** also exists as a variant with sill profile. The sill profile ensures **better water drainage**. The sill profile allows the roof covering to be completely concealed. This provides an **aesthetic finish**. It also offers more placement options.

OPTIONS DUCO ROOF TURRET SOLID 30Z

DucoGrille Close 105

The DucoGrille Close 105 can, as an option, be integrated in the roof turret, thereby ensuring a controlled air supply or extraction. More information about the DucoGrille Close 105 can be found on page 34.

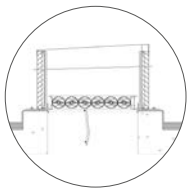

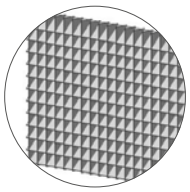

Eggcrate grille

The Duco Roof Turret Solid 30Z is available with an optional Eggcrate grille, which provides even better water resistance (combination with the P2 louvre blades).

VENTILATIVE COOLING

'Free cooling' by means of purge ventilation

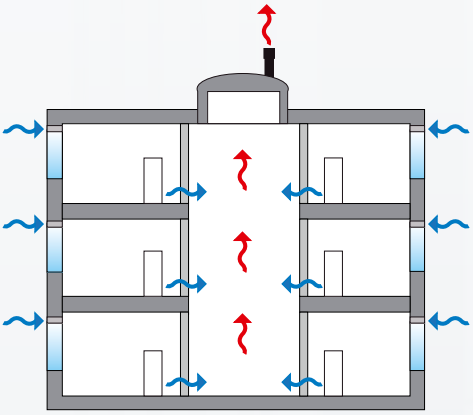

Airtight construction and good insulation not only result in lower heat demand, they also increase the demand for **cooling in a building**. Certainly during the warmer (summer) months, the indoor temperature can rise quickly. **Summer comfort** is therefore increasingly being included in the design requirements of buildings.

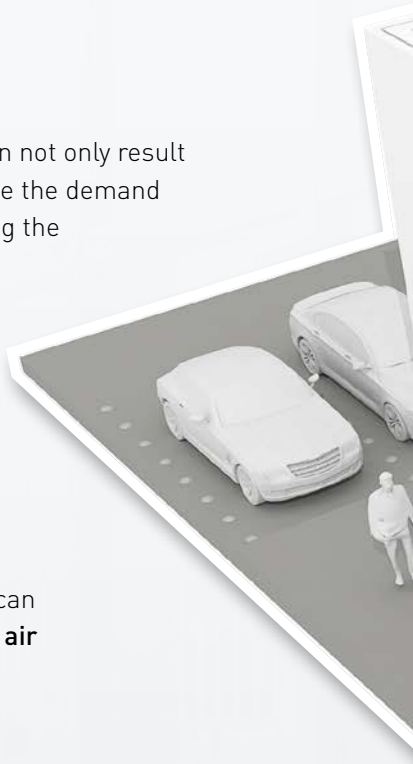

This is because by using **high flow rates** of outside air (purge ventilation), a building can achieve optimum cooling using ventilative cooling (free cooling). That means **without air conditioning** or other artificial means, provided one or two guidelines are followed:

- **A** **Always use ventilative cooling combined with good exterior solar shading.**
- **B** **When designing the building, allow for sufficient thermal mass in the building to store the cooling effects of the outside air.**
- **C** **Use the correct pressure drop when sizing the supply grilles.**

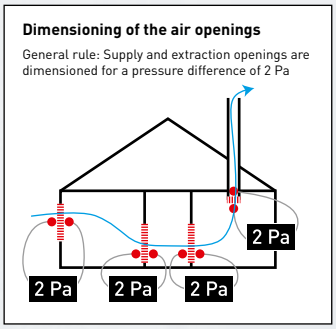

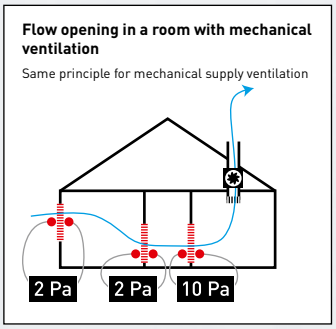

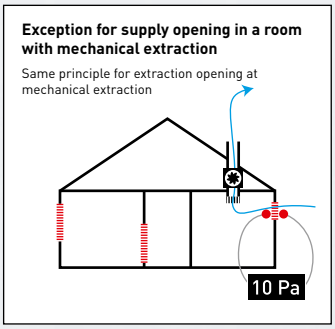

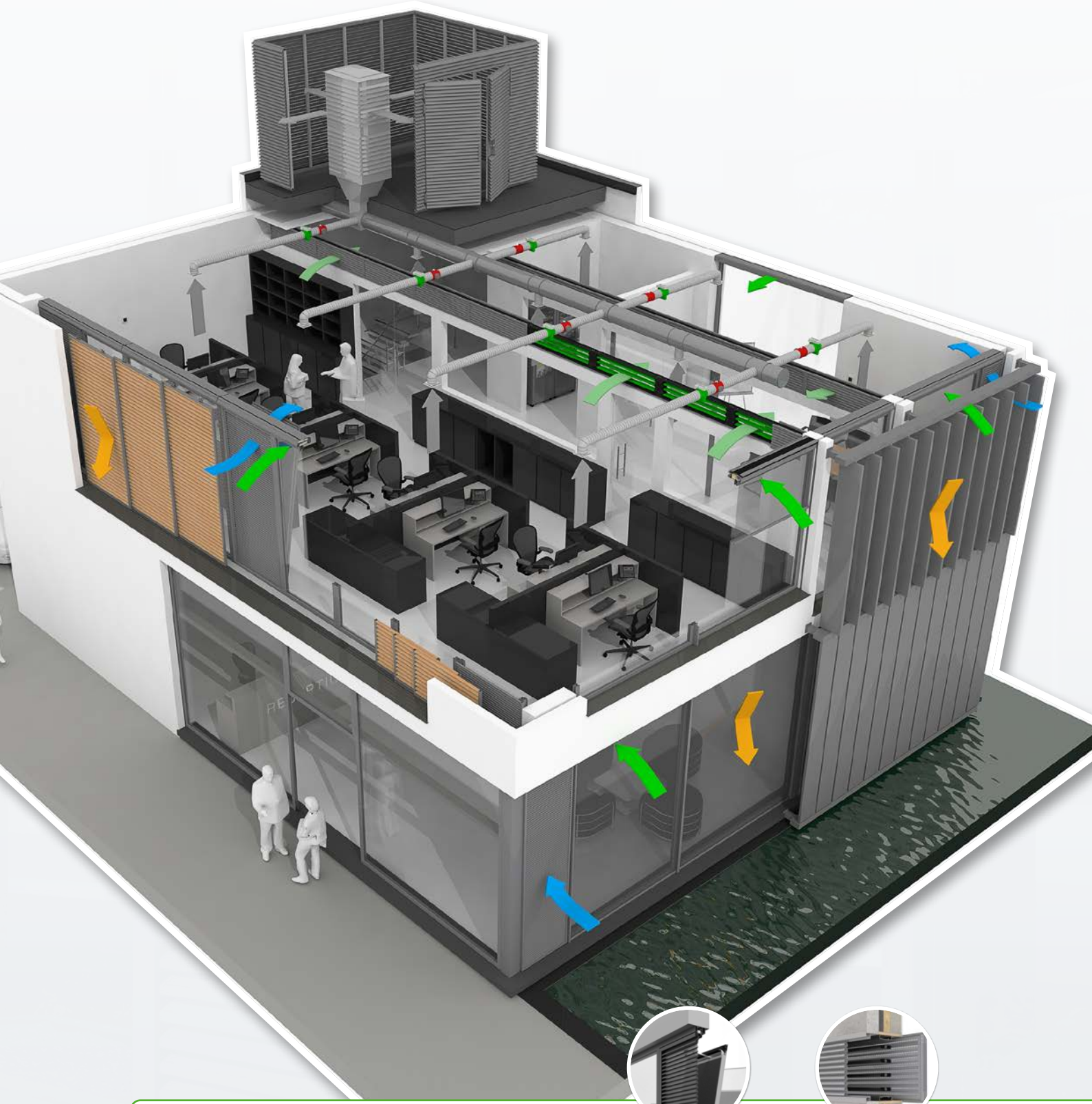

DucoGrille **NightVent**

DucoGrille **Close 105**

DUCO'S SOLUTIONS

DUCO's extensive range of (controlled) wall and window louvres, louvre walls and exterior solar shading are excellent aids within the overall ventilative cooling strategy. Contact your DUCO adviser for more information.
We will gladly provide you with tailored advice!

IMPACT AND FALL-THROUGH PROTECTION

Façade elements are increasingly expected to meet 'impact protection' and 'fall-through protection' requirements:

Impact protection

The resistance of a material to which an intense force or shock is exerted for a short period of time.

Fall-through protection

The load applied to resist penetration that prevents people from falling through this barrier.

Note: often a specific mounting method applies or the test is only valid for specific versions (e.g. a certain step, a certain maximum span ...).

Contact DUCO for more information. Full test reports can be requested from DUCO.

Overview of results

DUCO products achieve very good results in terms of impact and fall-through protection:

	Impact protection		Fall-through protection			
	EN 13049	**NF P08-302**	**B 03-004**	**NEN EN 1991-1-1**	**NF P01-013**	**BS 6180**
Maximum class	Class 5	H2	Class C5	Class C5	C1-C5/D	XI
DUCOGRILLE SOLID						
DucoGrille Solid **G 30Z**	-	-	-	-	-	X
DucoGrille Solid **G 30Z Large**	-	-	-	-	-	XI
DucoGrille Solid **F 30Z/24**	-	-	-	-	-	XI
DucoGrille Solid **F 30Z/28**	-	-	-	-	-	XI
DucoGrille Solid **F 30Z/32**	-	-	-	-	-	XI
DucoGrille Solid **M 30Z**	-	-	-	-	-	XI
DucoGrille Solid++ **G 30Z**	5	H2/C2	C4	A/B/F/G	A/B*	XI
DucoGrille Solid++ **M 30Z**	-	-	-	-	-	XI
DucoGrille Solid **G 30Z Barrier Load**	5	H2/C2	C4	A/B/F/G	A/B*	XI
DUCO BARRIER LOAD LOUVRE						
Duco Barrier Load Louvre	5	Louvre blade angle 3°: Q4 Louvre blade angle 45° and 55°: H2	A/B/C4/D	A/B/C4/D	-	XI
DUCO ACOUSTIC PANEL						
Duco Acoustic **Panel** 150	5	Q4	C5b	A/B/F/G	C5	XI
Duco Acoustic **Panel** 250	5	Q4	C5b	A/B/F/G	C1-C5/D	XI
Duco Acoustic **Panel** 300(HP)	5	Q4	C5b	A/B/F/G	C1-C5/D	XI
Duco Acoustic **Panel** 500HP	5	Q4	C5b	A/B/F/G	C1-C5/D	XI

* Width < 600 mm

DucoGrille **Classic** 20Z

DucoGrille **Solid** 30Z

DucoGrille **Classic** 50Z

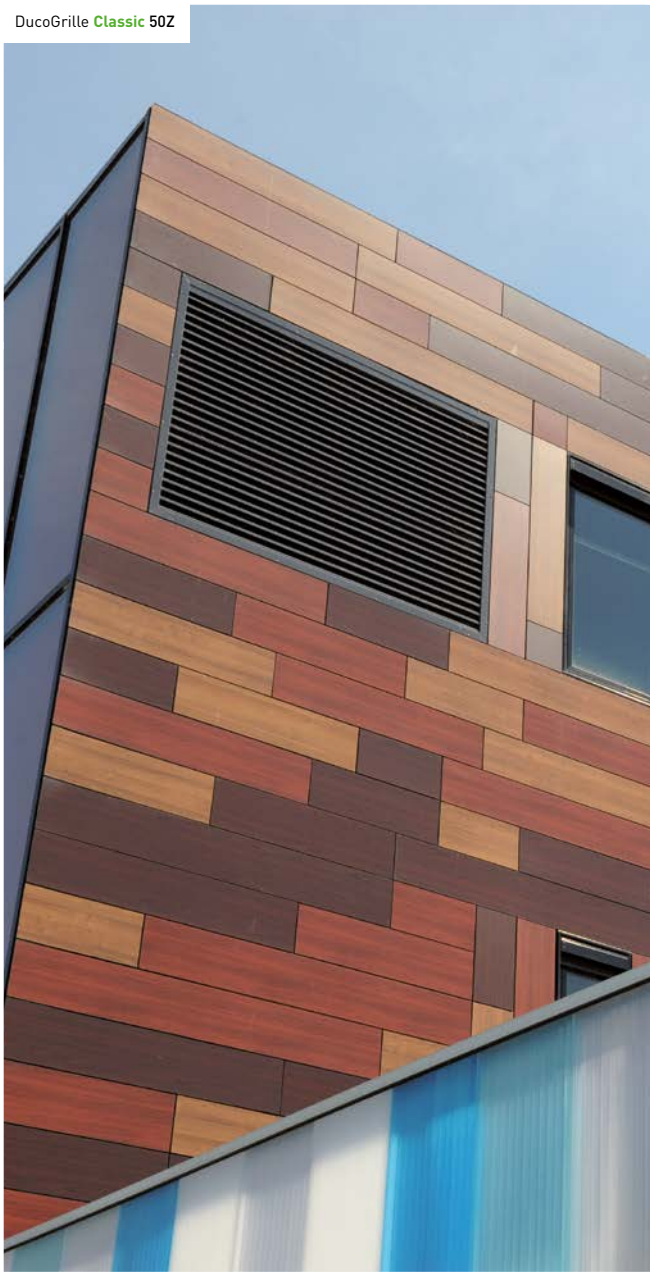

DucoGrille **NightVent**

DucoGrille **NightVent**

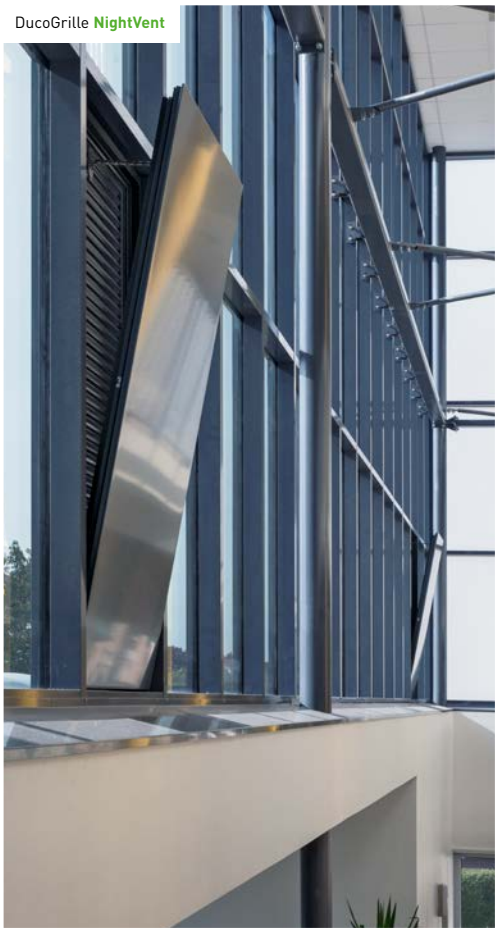

DucoGrille **Classic** 20Z

DucoGrille **Classic** 20Z

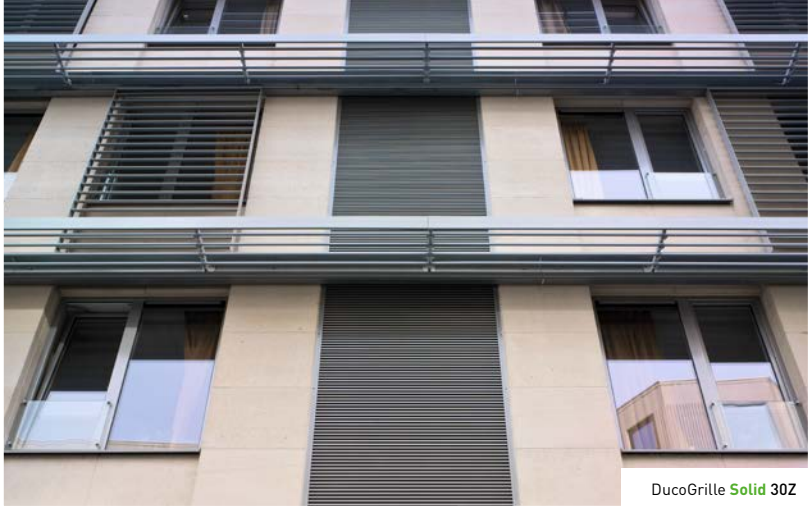

DucoGrille **Solid** 30Z

DucoGrille **Classic** 20Z

DucoGrille **Solid** MR 30Z

DucoGrille **Solid** 30Z

DucoGrille **NightVent**

DucoGrille **Solid++** 30Z

DucoGrille **NightVent**

SERVICE PLEASE!

To provide the best support for your project, you will find **sectional drawings**, **technical data sheets**, **specification texts** and **assembly instructions** on our **website: www.duco.eu**. Find out what else DUCO can do for you.

Calculating air flow → airflowcalculation.duco.eu

Calculate the required air flow rates, area or pressure differences for each type of louvre grille with this handy online tool.

BIM library → www.duco.eu/bim

All products in this library are freely available in Autodesk Revit.

Specification texts → You will find specification texts for all products on our website www.duco.eu.

TAILORED ADVICE

DUCO offers tailored expertise & services for specifiers, and has a dedicated unit to advise and support architects, engineering offices and consultancies. DUCO works with reputable organisations such as the WTCB, the Von Karman Institute, etc. DUCO's knowledge and years of experience enable an appropriate solution to be offered for each of your projects.

Any questions? Please contact us at info@duco.eu or call 0333 112 1134 for tailored advice!

DIMENSIONS AND ORDERING INFORMATION

Grille type	Grille size = ORDER SIZE	Mounting
 G Recessed wall louvres **with** flange	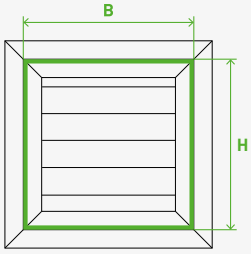 Dimension of louvre without flange (installation dimension) = **(Width – 10 mm)** **× (Height – 10 mm)** **of the wall opening**	Fixing lugs supplied as standard. Allow 5 mm clearance (all round) between opening in wall and frame for fixing.
 N Recessed wall louvre **without** flange	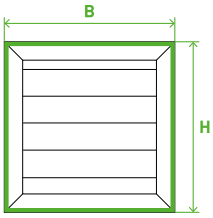 Dimension of grille (installation dimension) = **(Width – 10 mm)** **× (Height – 10 mm)** **of the wall opening**	
 M Surface mounted wall louvres	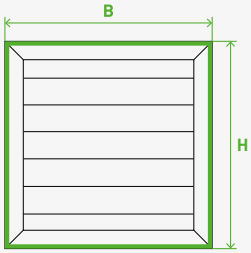 **Total Width** **× total Height** **of the louvre grille** (overall dimension) (MR: diameter of the grille)	Screws and plugs included as standard
 F Window louvres + DucoGrille **NightVent**	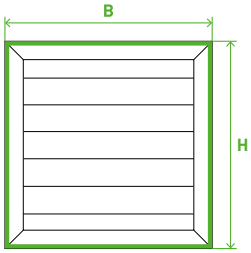 **Total Width** **× total Height** **of the louvre grille** (overall dimension)	Recessed mounting in window section
 DucoGrille **Close** 105	**Total Width x total Height** **of the louvre grille** (overall dimension)	To be provided by customer
 DucoGrille **Transfer**	Dimension of grille without flange (installation dimension) = **(Width – 10 mm)× (Height – 10 mm)** **of the wall/door opening**	To be provided by customer

TECHNICAL SPECIFICATION TABLE

		Solid 30Z (Barrier Load) see p. 8 & p. 12					Solid++ 30Z see p. 10		Solid ISO 30Z see p. 11		Classic 20Z see p. 14		Classic 20V see p. 15	
→ Ventilation values														
Property	Unit	P1		P2		NP	P1		P1	P2				
		STND	+OPT	STND	+OPT	STND	STND	+OPT	STND	STND	STND	+OPT	STND	+OPT
Visual free area	%	60	60	86	86	0	60	60	60	86	63	63	95	95
Physical free area	%	34	34	48	48	0	34	34	34	48	41	41	34	34
K factor, intake (lower is better)		16,94	21,43	15,02	18,58	n/a	16,94	21,43	16,94	15,02	24,27	24,27	41,62	45,04
K factor, exhaust (lower is better)		18,26	17,08	15,62	14,13	n/a	18,26	17,08	18,26	15,62	33,03	33,03	41,62	45,04
Ce (higher is better)		0,243	0,216	0,258	0,232	n/a	0,243	0,216	0,243	0,258	0,203	0,203	0,155	0,149
CD (higher is better)		0,234	0,242	0,253	0,266	n/a	0,234	0,242	0,234	0,253	0,174	0,174	0,155	0,149
→ Water resistance (with insect screen)														
Property	Unit	P1		P2		NP	P1		P1	P2				
		STND	+OPT	STND	+OPT	STND	STND	+OPT	STND	STND	STND	+OPT	STND	+OPT
Water resistance for v = 0 m/s	class	B	B	C	B	n/a	B	B	B	C	C	B	A	A
Water resistance for v = 0.5 m/s	class	C	B	C	B	n/a	C	B	C	C	C	B	B	A
Water resistance for v = 1.0 m/s	class	C	C	C	B	n/a	C	C	C	C	C	C	C	B
Water resistance for v = 1.5 m/s	class	D	C	D	B	n/a	D	C	D	D	D	D	D	B
Water resistance for v = 2.0 m/s	class	D	D	D	C	n/a	D	D	D	D	D	D	D	C
Water resistance for v = 2.5 m/s	class	D	D	D	D	n/a	D	D	D	D	D	D	D	D
→ Sound reduction														
Solution		P1		P2		NP	P1		P1	P2				
Rw	dB	n/a		n/a		n/a	n/a		n/a	n/a	n/a		n/a	
C		n/a		n/a		n/a	n/a		n/a	n/a	n/a		n/a	
C_{tr}		n/a		n/a		n/a	n/a		n/a	n/a	n/a		n/a	
Octave band values at 125 Hz	dB	n/a		n/a		n/a	n/a		n/a	n/a	n/a		n/a	
at 250 Hz	dB	n/a		n/a		n/a	n/a		n/a	n/a	n/a		n/a	
at 500 Hz	dB	n/a		n/a		n/a	n/a		n/a	n/a	n/a		n/a	
at 1000 Hz	dB	n/a		n/a		n/a	n/a		n/a	n/a	n/a		n/a	
at 2000 Hz	dB	n/a		n/a		n/a	n/a		n/a	n/a	n/a		n/a	
at 4000 Hz	dB	n/a		n/a		n/a	n/a		n/a	n/a	n/a		n/a	
→ Frame types and dimensions														
Property	Unit	P1		P2		NP	P1		P1	P2				
Louvre pitch	mm	37,5					37,5		37,5		35		20	
G Recessed wall louvre with flange — **Installation depth**	mm	G: 34 / G Large: 32 / Barrier Load: 38					38,4		×		30		30	
G Recessed wall louvre with flange — **Frame rebate**	mm	G: 18 / G Large: 40 / Barrier Load: 15					15				19		19	
N Recessed wall louvre without flange — **Installation depth**	mm	×					×		×		×		×	
N Recessed wall louvre without flange — **Frame rebate**	mm													
F Window louvre — **Flange width**	mm	24/28/32					×		24/28/32/36/ 40/44/48		24		24	
F Window louvre — **Frame depth**	mm	38 (F30Z/24) 42 (F30Z/28 en F30Z/32)							88		35		35	
M Surface mounted wall louvre — **Installation depth**	mm	Rectangular (M): 43 Round (MR): 35 *no +OPT version possible with M grille					42 *no +OPT version possible with M grille		×		×		×	
Minimum / maximum louvre dimensions (Width x Height)	mm	Rectangular (G, F, M): min. W 200 x H 200 Round (MR): min. dia. 300 - max. dia. 1500					min. W 200 x H 200		min. 300 x 300 mm max. 2500 mm high / wide if other dimension < 1250 mm		min. W 200 x H 200		min. W 200 x H 200	

STND and +OPT version: see page 5

DUCOGRILLE CLASSIC

Classic 50Z		Classic 50/75Z		HP Classic 45HP		HP Classic 50HP		HP Classic 60HP		HP Classic 60HP Vertical		HP Classic 130HP	HP Classic 130HP Basic	Classic 70V		Classic 70V Vertical	
see p. 16		see p. 17		see p. 18		see p. 19		see p. 20		see p. 21		see p. 22	see p. 23	see p. 24		see p. 25	
STND	+OPT	STND	+OPT	STND	+OPT	STND	+OPT	STND	+OPT	STND	+OPT	STND	STND	STND	+OPT	STND	+OPT
75	75	80	80	70	70	88	88	60	60	60	n/a	88	88	65	65	65	65
47	47	49	49	60	60	68	68	50	50	50	n/a	70	70	36	36	36	36
18,58	23,34	17,51	20,85	8,60	11,49	6,28	8,07	25,00	25,77	26,85	n/a	9,02	9,70	73,05	81,16	73,05	81,16
14,46	14,13	12,94	12,06	7,51	7,34	6,51	5,81	15,75	15,62	16,94	n/a	12,40	13,13	84,17	94,26	84,17	94,26
0,232	0,207	0,239	0,219	0,341	0,295	0,399	0,352	0,200	0,197	0,193	n/a	0,333	0,321	0,117	0,111	0,117	0,111
0,263	0,266	0,278	0,288	0,365	0,369	0,392	0,415	0,252	0,253	0,243	n/a	0,284	0,276	0,109	0,103	0,109	0,103
STND	+OPT	STND	+OPT	STND	+OPT	STND	+OPT	STND	+OPT	STND	+OPT	STND	STND	STND	+OPT	STND	+OPT
C	A	C	A	C	B	C	B	A	A	A	n/a	A	A	B	A	A	A
C	B	C	B	C	B	C	B	A	A	A	n/a	A	A	B	B	A	A
C	B	C	B	D	C	C	B	A	A	A	n/a	A	A	B	B	A	A
D	C	D	C	D	C	D	C	A	A	A	n/a	A	B	C	C	C	A
D	C	D	C	D	C	D	C	A	A	A	n/a	A	B	D	D	C	A
D	D	D	D	D	C	D	C	C	A	A	n/a	A	C	D	D	D	C
n/a		n/a		n/a		n/a		n/a		n/a		n/a	n/a	n/a		n/a	
n/a		n/a		n/a		n/a		n/a		n/a		n/a	n/a	n/a		n/a	
n/a		n/a		n/a		n/a		n/a		n/a		n/a	n/a	n/a		n/a	
n/a		n/a		n/a		n/a		n/a		n/a		n/a	n/a	n/a		n/a	
n/a		n/a		n/a		n/a		n/a		n/a		n/a	n/a	n/a		n/a	
n/a		n/a		n/a		n/a		n/a		n/a		n/a	n/a	n/a		n/a	
n/a		n/a		n/a		n/a		n/a		n/a		n/a	n/a	n/a		n/a	
n/a		n/a		n/a		n/a		n/a		n/a		n/a	n/a	n/a		n/a	
n/a		n/a		n/a		n/a		n/a		n/a		n/a	n/a	n/a		n/a	
65		75		50		50		25		25		50	50	65		65	
62		62		62		62		76,5		76,5		158	158	82		82	
48		48		48		48		33		33		48	48	48		48	
65		65		65		65		76,5		76,5		158	158	×		×	
0		0		0		0		0		0		0	0				
28		28		28		28		28 - 32		28 - 32		×	×	×		×	
77		77		77		77		76,5		76,5							
×		×		×		×		×		×		×	×	×		×	
Type G & N: min. W 300 x H 300 Type F: min. W 300 x H 350		Type G & N: min. W 300 x H 300 Type F: min. W 300 x H 350		min. W 250 x H 250		min. W 250 x H 250		Type G & N: min. W 200 x H 200 Type F: min. W 300 x H 300		Type G & N: min. W 200 x H 200 Type F: min. W 300 x H 300		min. W 250 x H 250	min. W 250 x H 250	min. W 300 x H 300		min. W 300 x H 300	

TECHNICAL SPECIFICATION TABLE

DUCOGRILLE ACOUSTIC

→ Ventilation values

Property	Unit	Acoustic 75Z (see p. 28)		Acoustic 75L (see p. 28)		Acoustic 150 (see p. 29)	150		250	
		STND	+OPT	STND	+OPT	STND	STND	+OPT	STND	+OPT
Visual free area	%	76	76	95	95	74	71	71	75	75
Physical free area	%	28	28	28	28	35	31	31	31	31
K factor, intake (lower is better)		16,94	26,03	16,52	22,89	11,49	10,82	12,76	12,94	16,00
K factor, exhaust (lower is better)		21,84	30,19	12,14	15,50	11,41	11,34	12,57	13,22	17,36
Ce (higher is better)		0,243	0,196	0,246	0,209	0,295	0,304	0,280	0,278	0,250
CD (higher is better)		0,214	0,182	0,287	0,254	0,296	0,297	0,282	0,275	0,240

→ Water resistance (with insect screen)

Property	Unit						150		250	
		STND	+OPT	STND	+OPT	STND	STND	+OPT	STND	+OPT
Water resistance for v = 0 m/s	class	B	B	B	B	B	C	C	C	B
Water resistance for v = 0.5 m/s	class	B	B	C	B	C	D	D	D	C
Water resistance for v = 1.0 m/s	class	C	C	C	C	C	D	D	D	D
Water resistance for v = 1.5 m/s	class	D	C	D	D	C	D	D	D	D
Water resistance for v = 2.0 m/s	class	D	D	D	D	D	D	D	D	D
Water resistance for v = 2.5 m/s	class	D	D	D	D	D	D	D	D	D

→ Sound reduction

Solution					150	250
Rw		dB	6	6	11	11	14
C			0	0	-1	-1	-1
C_{tr}			-1	-2	-2	-2	-2
Octave band values	at 125 Hz	dB	2,7	2,6	4,8	5,3	6,1
	at 250 Hz	dB	3,5	3	4	6,0	6,2
	at 500 Hz	dB	2,1	1,9	7,4	6,2	12,2
	at 1000 Hz	dB	4,8	4,4	11,4	11,3	13,7
	at 2000 Hz	dB	10,1	9,7	12,4	13,3	15,2
	at 4000 Hz	dB	12,4	11,5	13	11,3	13,8

→ Frame types and dimensions

Property		Unit				150	250
Louvre pitch		mm	60	60	150	130	150
G Recessed wall louvre with flange	**Installation depth**	mm	82	82	158	158	250
	Frame rebate	mm	48	48	48	37	37
N Recessed wall louvre without flange	**Installation depth**	mm	×	×	158	×	×
	Frame rebate	mm			0		
F Window louvre	**Flange width**	mm	×	×	×	×	×
	Frame depth	mm					
M Surface mounted wall louvre	**Installation depth**	mm	×	×	×	×	×
Minimum / maximum louvre dimensions (Width x Height)		mm	min. W 250 x H 250	min. W 250 x H 250	min. W 250 x H 250	min. W 250 x H 280	min. W 250 x H 325

STND and +OPT version: see page 5

						DUCOGRILLE TRANSFER		DUCOGRILLE CLOSE			DUCOGRILLE NIGHTVENT
Acoustic Panel see p. 30 & p. 31						**Transfer** see p. 32	**Transfer Acoustic** see p. 33	**Close 105** see p. 34	**Close 35Z** see p. 36	**Close M 100** see p. 37	**NightVent** see p. 38
300		300HP		500HP							
STND	+OPT	STND	+OPT	STND	+OPT	STND	STND	STND	STND	STND	STND
71	71	71	71	75	75	95	27	74*	51	28	60
31	31	31	31	31	31	34	18	74*	39	28	34
17,95	19,58	16,00	17,22	15,26	16,80	41,62	145,16	2,57*	30,19	89,00	24,51
18,74	20,29	16,80	18,11	16,26	17,80	41,62	148,72	2,57*	23,56	89,00	24,51
0,236	0,226	0,250	0,241	0,256	0,244	0,155	0,083	0,624*	0,182	0,106	0,202
0,231	0,222	0,244	0,235	0,248	0,237	0,155	0,082	0,624*	0,206	0,106	0,202
								* measured without internal and external louvre grille			
300		300HP		500HP							
STND	+OPT	STND	+OPT	STND	+OPT	STND	STND	STND	STND	STND	STND
C	C	C	C	C	C	A	A	n/a	B	n/a	A
D	D	C	C	C	D	B	A	n/a	B	n/a	B
D	D	D	D	D	D	C	C	n/a	C	n/a	C
D	D	D	D	D	D	D	D	n/a	D	n/a	D
D	D	D	D	D	D	D	D	n/a	D	n/a	D
D	D	D	D	D	D	D	D	n/a	D	n/a	D
300		300HP		500HP							Closed
17		17		21		n/a	see p. 33	21	n/a	n/a	33
-1		-1		-2		n/a		-2	n/a	n/a	-1
-4		-4		-5		n/a		-2	n/a	n/a	-4
6,3		4,7		6,7		n/a		13,7	n/a	n/a	21,5
5,9		5,7		8,7		n/a		14,6	n/a	n/a	21,3
11,6		11,4		18,5		n/a		16,5	n/a	n/a	28,2
20,1		21,9		21,6		n/a		20,9	n/a	n/a	37,1
22,7		22,7		26,7		n/a		23,2	n/a	n/a	45,2
21,5		21,5		27,9		n/a		29,8	n/a	n/a	53,7
300		300HP		500HP							
130		130		150		20	35	91	50	n/a	37,5
303		303		467		28 - 84	28 - 84	see p. 34	45	×	×
37		37		37		21	21		20		
×		×		×		×	×		45	×	×
									0		
×		×		×		×	×		24/28	×	24/28/32/36/40/44/48
									45		115
×		×		×		×	×		×	13	×
min. W 250 x H 280		min. W 250 x H 280		min. W 250 x H 325		**Without counterframe:** min. W 190 x H 90 mm **With counterframe:** min. W 200 x H 100 mm	**Without counterframe:** min. W 245 x H 115 mm **With counter-frame:** min. W 255 x H 125 mm	see drawing on p. 35	see table on p. 36	fixed height 200 or 300 max. width 1000 mm	see tables on p. 40

A SOLUTION FOR EVERY PROJECT

DUCO

L0000510 Document last modified on 29.10.2025(revisionP)